Riveted Ladder, Safety Cage and Rest Platform

INSTALLATION INSTRUCTIONS

SCAFCO® Grain Systems Co.

BUILT for LIFE™

290349

IMPORTANT

READ THESE INSTRUCTIONS CAREFULLY FOR SAFETY AND PROPER INSTALLATION

Table of Contents

Typical Ladder Bolts 3
Riveted Ladder Section / Splice Detail 4
Ladder Bracket Connection Details 5
Interior Ladder Assembly & Installation 6
Interior Ladder Brackets Spacing 7
Exterior Ladder Assembly & Installation 8
Security Cover Installation 9
Exterior Ladder with Safety Cage Assembly 10
Exterior Ladder Assembly 11
New Eave Platform 12
Safety Cage 13
Safety Cage Stabilizer Bar Assembly 14
Rest Platform Assembly 15
Rest Platform Locations By Eave Height 16-21
Exterior Ladder Starting Detail 22
Platform Placement Detail 23-28
Hopper Bottom Tank Ladder Assembly (No Access Door) 29
Rest Platform Locations For Specific HBTs 30-34
Hopper Bottom Tank Access Door Platform 35
Ladder Assembly To Access Door Platform
for HBT/SHBT With M-Style Leg 36
Ladder Assembly to Access Door Platform
For HBT/SHBT With Column 37
Wind Ring and Ladder Orientation 38
Rest Platform and Ladder Orientation 39
General Ladder Assembly Orientation 40

Typical Ladder Bolts

SAE GRADE 8 BOLTS	
SAE GRADE 5 BOLTS	SAE GRADE 2 BOLTS NOT ALLOWED ANYWHERE ON SCAFCO SILOS
ASTM A325 BOLTS A325 USED FOR STRUCTURAL CONNECTIONS	ASTM A307 BOLTS ALLOWED ONLY FOR ANCHOR BOLTS
CONTACT SCAFCO BEFORE SUBSTITUTING ANY BOLTS ON SILOS.	

TO PREVENT STRIPPING OFF THE SEALING WASHER FROM THE BOLT HEAD. ALWAYS DRIVE THE NUT (INSTEAD OF THE BOLT) TO FASTEN CONNECTIONS.

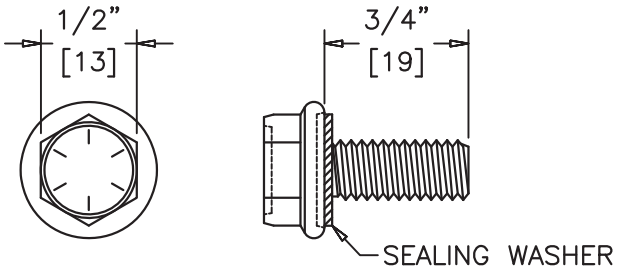

5/16" X 3/4" HEX HEAD BOLT
W/SEALING WASHER GRADE 8
(PART NUMBER 290001)

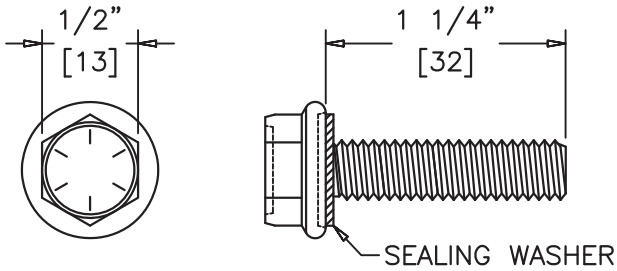

5/16" X 1 1/4" HEX HEAD BOLT
W/SEALING WASHER GRADE 8
(PART NUMBER 290002)

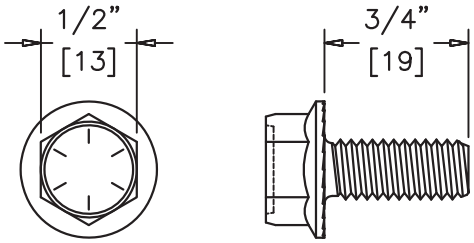

5/16" X 3/4" SERRATED FLANGE
HEX HEAD BOLT GRADE 8
(PART NUMBER 291291)

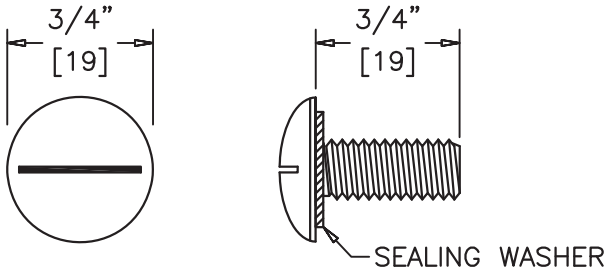

5/16" X 3/4" TRUSS HEAD BOLT GRADE 8
(PART NUMBER 290410)

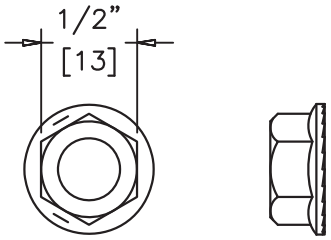

5/16" SERRATED FLANGE HEX NUT
(PART NUMBER 290010)

SAE GRADE 8 BOLT MEASUREMENT AND TORQUE VALUES	
DIAMETER (IN) [mm]	TORQUE (IN–LB) [N–M]
5/16" [8]	221 [25]

Riveted Ladder Section / Splice Detail

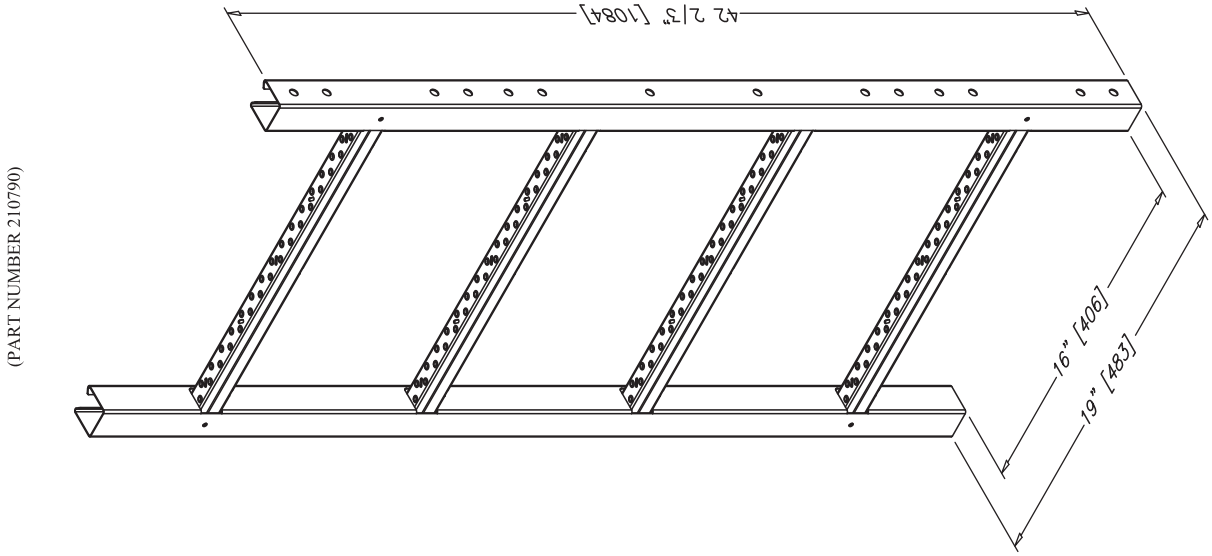

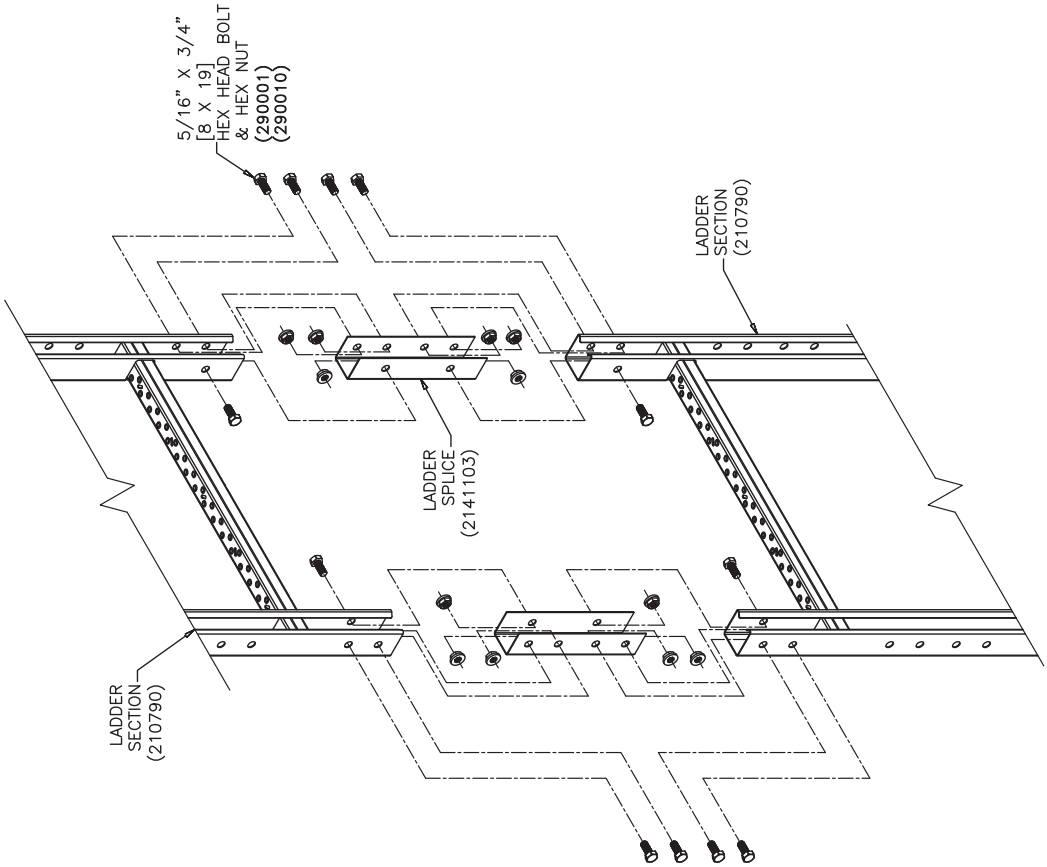

Ladder Bracket Connection Details

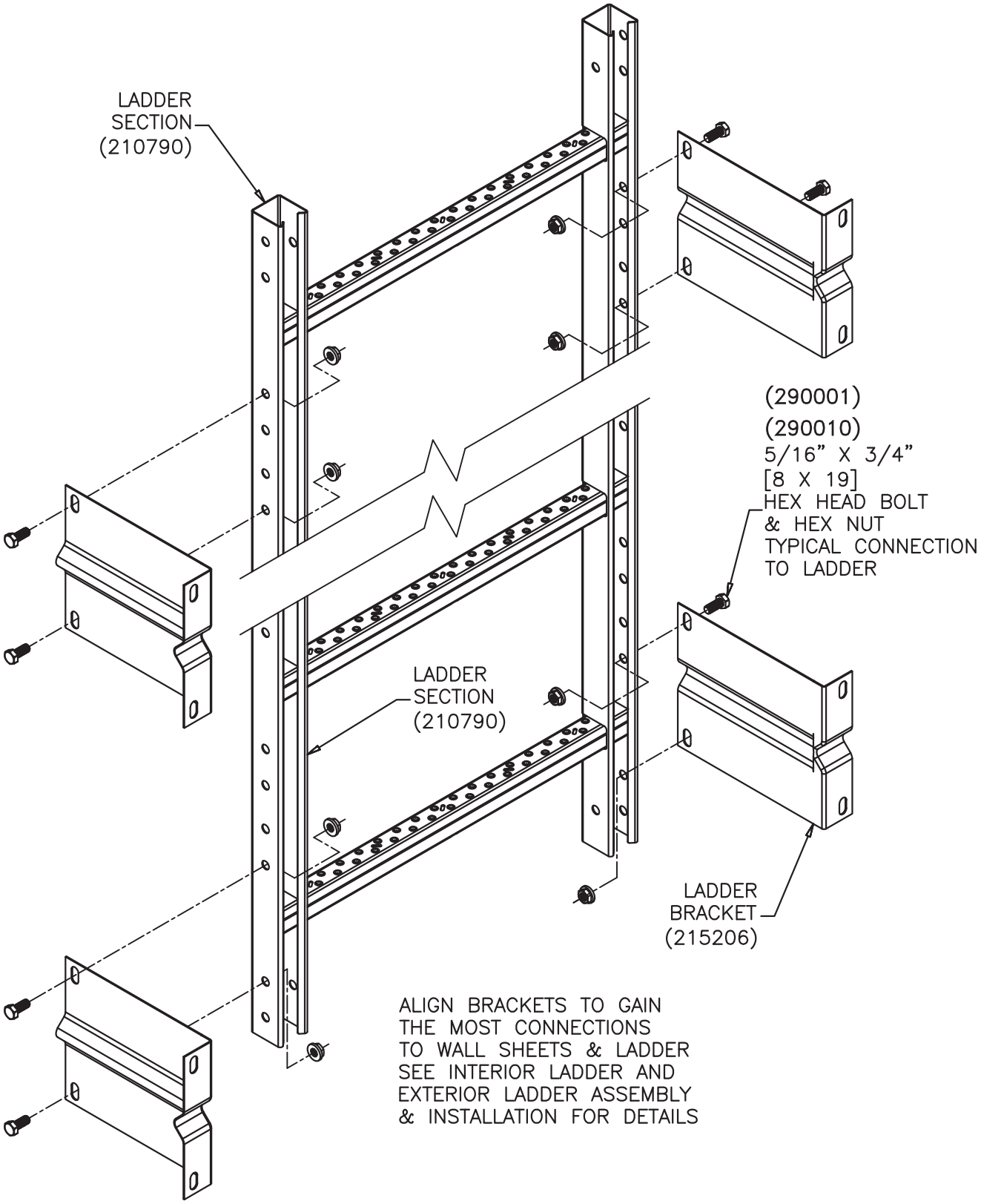

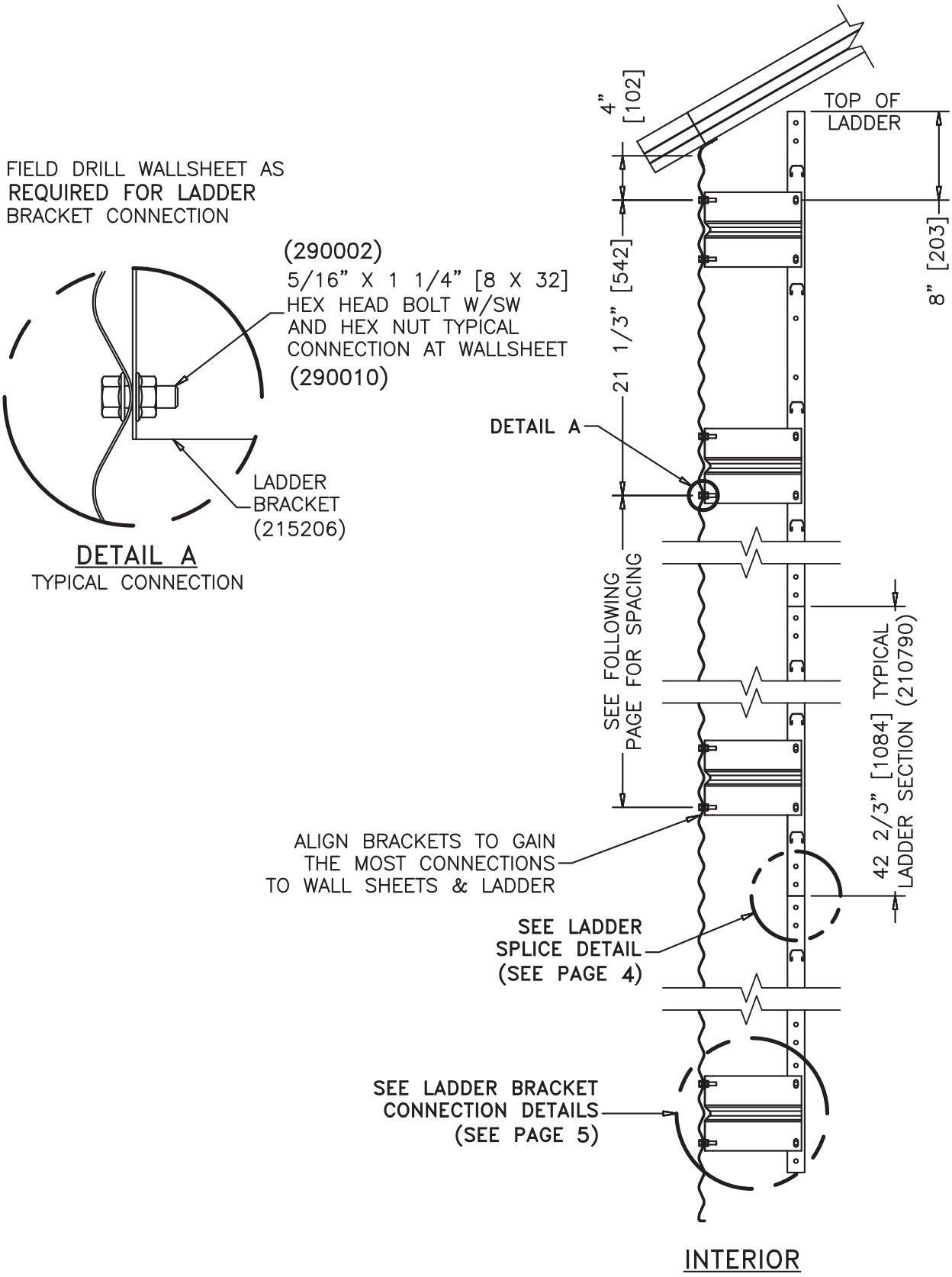
FIELD DRILL WALLSHEET AS
REQUIRED FOR LADDER
BRACKET CONNECTION
(290002)
5/16" X 1 1/4" [8 X 32]
HEX HEAD BOLT W/SW
AND HEX NUT TYPICAL
CONNECTION AT WALLSHEET
(290010)
LADDER
BRACKET
(215206)
DETAIL A
TYPICAL CONNECTION
4" [102]
TOP OF
LADDER
8" [203]
21 1/3" [542]
DETAIL A
SEE FOLLOWING
PAGE FOR SPACING
42 2/3" [1084] TYPICAL
LADDER SECTION (210790)
ALIGN BRACKETS TO GAIN
THE MOST CONNECTIONS
TO WALL SHEETS & LADDER
SEE LADDER
SPLICE DETAIL
(SEE PAGE 4)
SEE LADDER BRACKET
CONNECTION DETAILS
(SEE PAGE 5)
INTERIOR

Interior Ladder Brackets Spacing

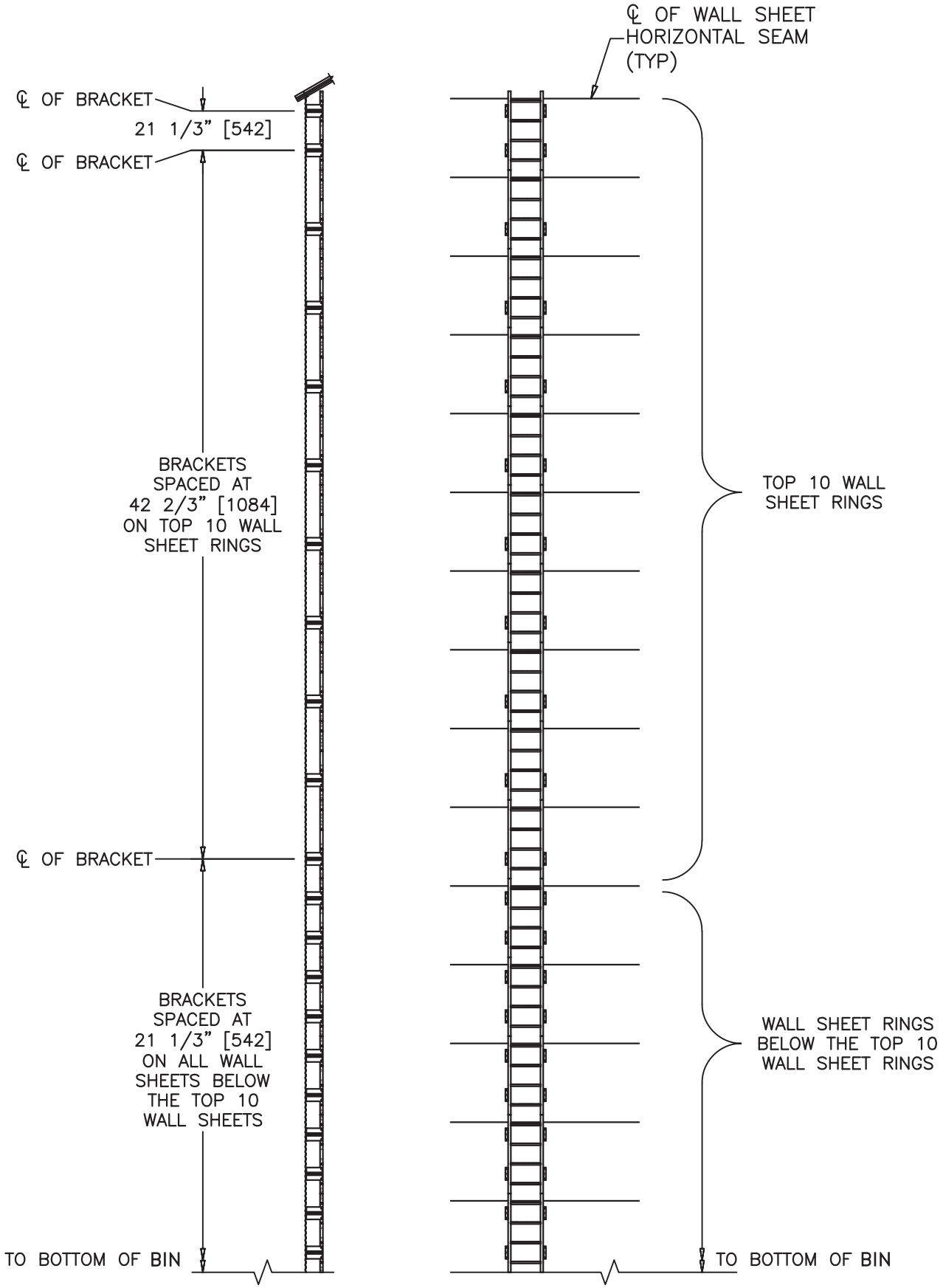

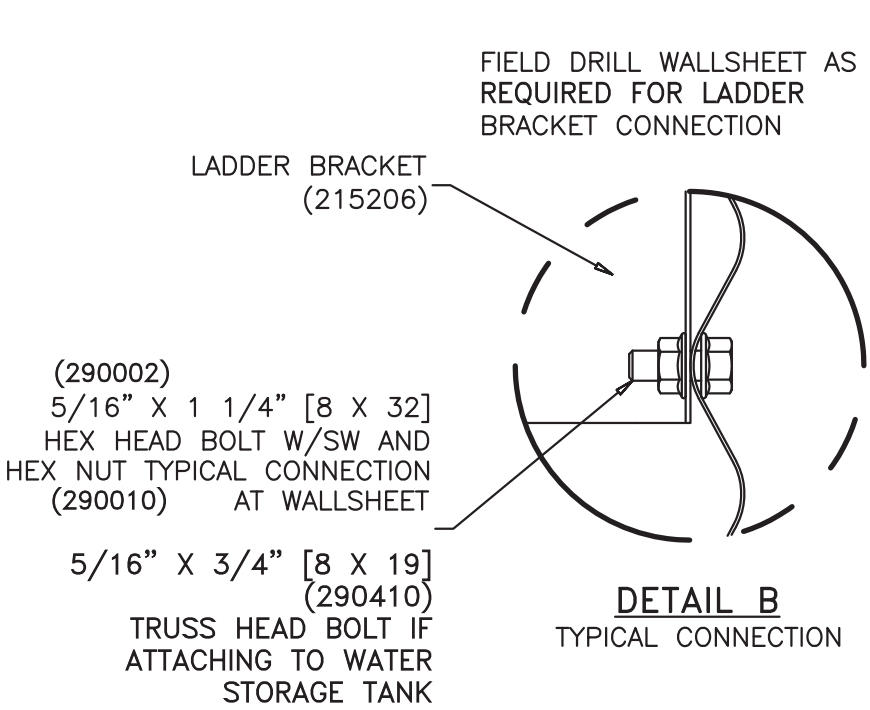

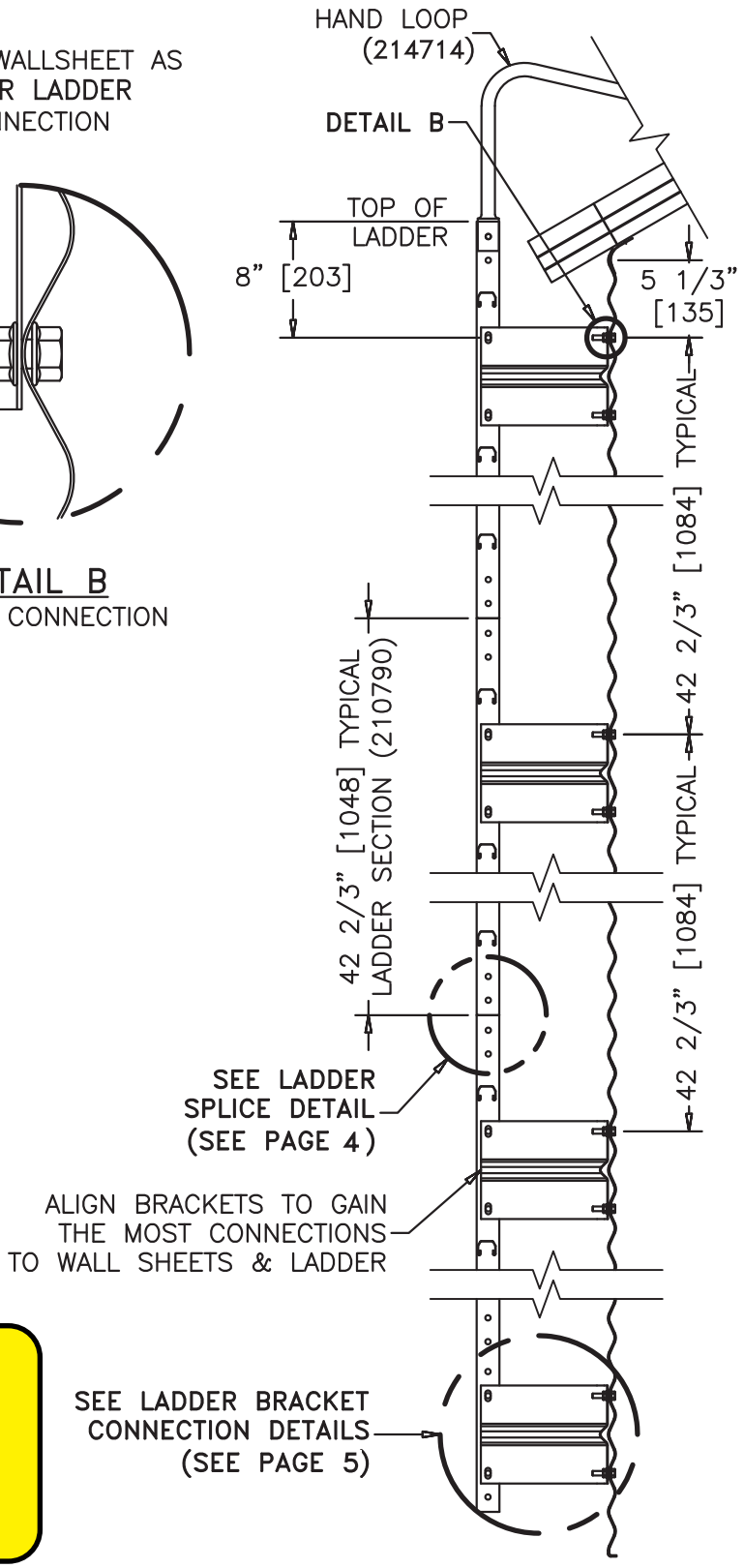

SAFETY NOTICE

SCAFCO EXTERIOR LADDERS EXTEND TO THE TOP OF THE FOUNDATION. PLEASE BE AWARE THAT UNAUTHORIZED USE OF THE LADDER MAY OCCUR, AND OWNER SHOULD TAKE PRECAUTIONS TO PREVENT THIS UNAUTHORIZED USE, ESPECIALLY BY SMALL CHILDREN. AN OPTIONAL SECURITY COVER CAN BE ORDERED FROM SCAFCO TO HELP PREVENT ANY UNAUTHORIZED ACCESS.

WIND RING NOTICE

PLEASE REFER TO PAGE 35 FOR LADDER INSTALLATIONS OVER WIND RINGS.

OPTIONAL PURCHASE

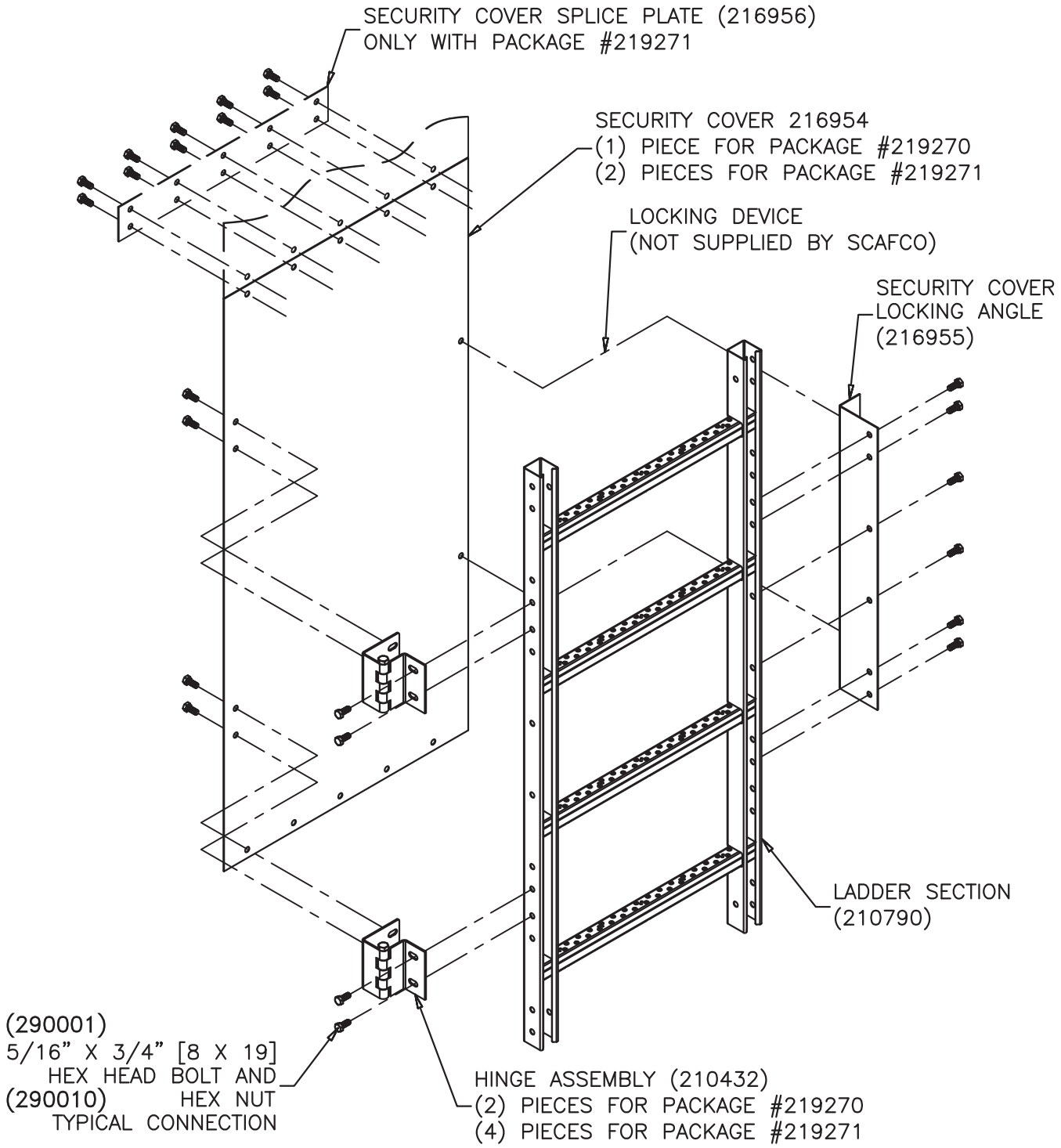

Exterior Ladder with Safety Cage Assembly

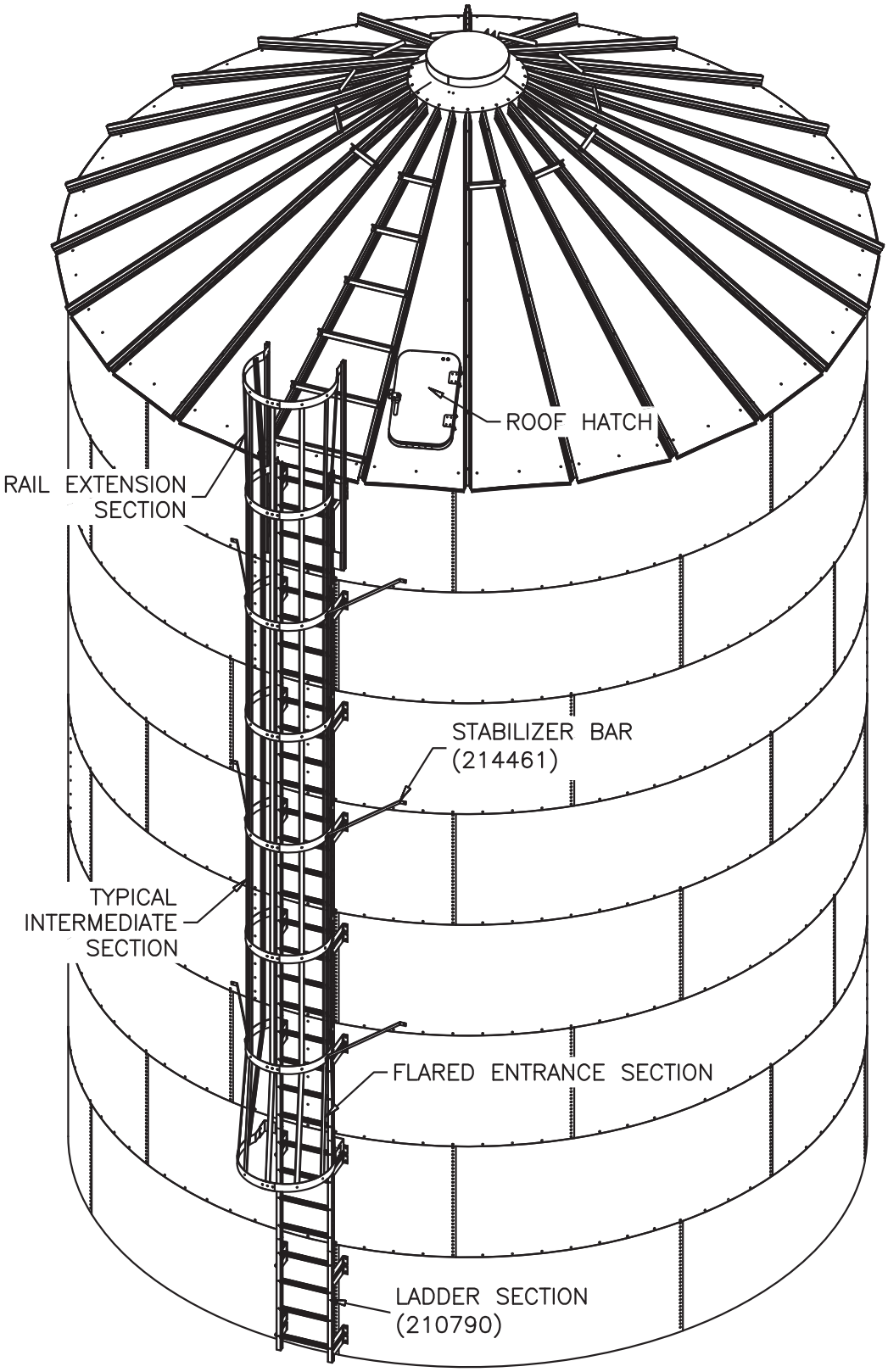

Exterior Ladder Assembly

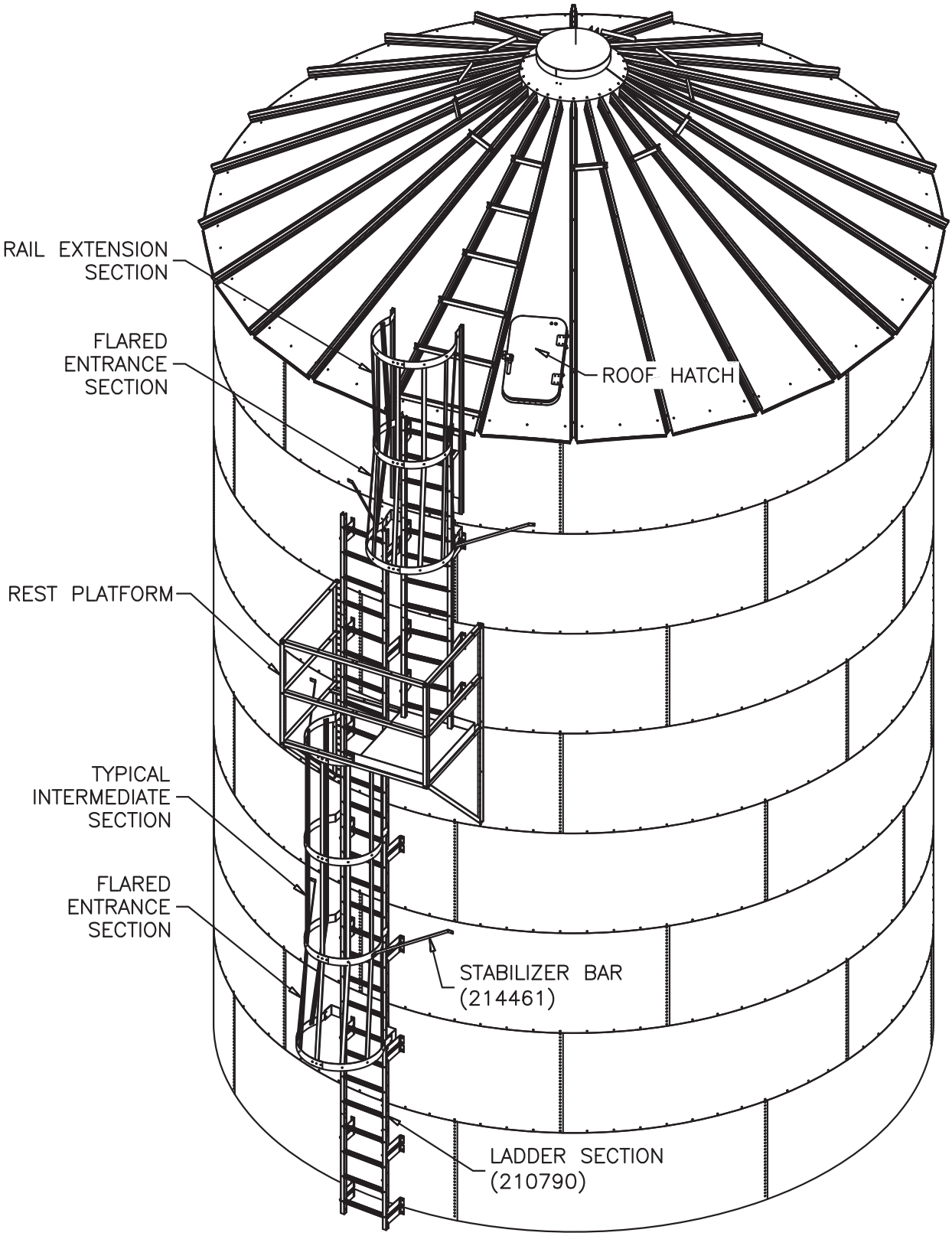

New Eave Platform

SCAFCO Grain Systems Company is pleased to introduce our new eave platform, which is shipping as standard with all silos that include a roof stair.

Configurable for left-hand or right-hand entry and full floor for access from roof stair, the eave platform mounts one ring below the roof hatch. The platform includes guard rails that fully enclose both the platform and the exterior ladder with safety cage. In addition to the platform itself, SCAFCO also provides a standard access ladder. This ladder eliminates the need for workers to kneel on the roof stair when it becomes necessary to look inside the bin.

This new step in safety coincides with the recent unanimous passage of ASABE Standard X624 Grain Bin Entry, which mandates the mounting of eave platforms on bins that feature roof stairs.

A rendering of the eave platform is shown below.

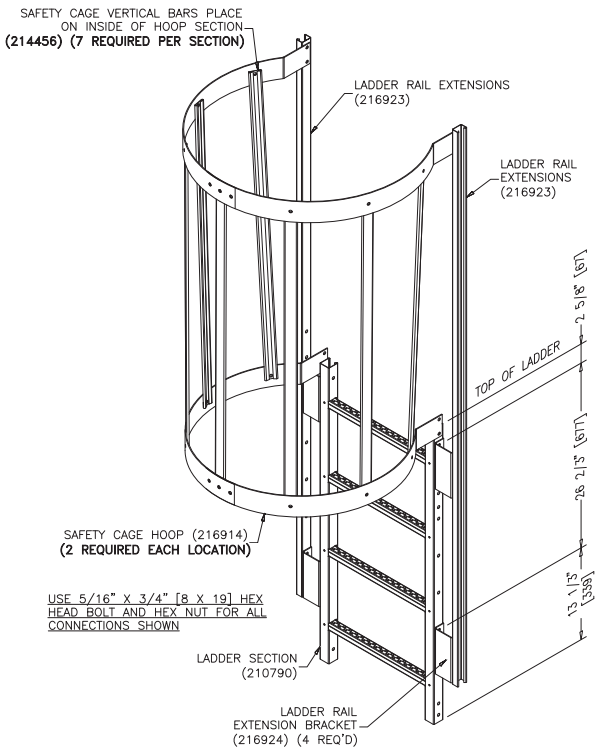
SAFETY CAGE VERTICAL BARS PLACE ON INSIDE OF HOOP SECTION
(214456) (7 REQUIRED PER SECTION)
LADDER RAIL EXTENSIONS (216923)
LADDER RAIL EXTENSIONS (216923)
TOP OF LADDER
2 5/8" [67]
26 21/2" [667]
13 1/2" [343]
SAFETY CAGE HOOP (216914)
(2 REQUIRED EACH LOCATION)
USE 5/16" X 3/4" [8 X 19] HEX HEAD BOLT AND HEX NUT FOR ALL CONNECTIONS SHOWN
LADDER SECTION (210790)
LADDER RAIL EXTENSION BRACKET (216924) (4 REQ'D)

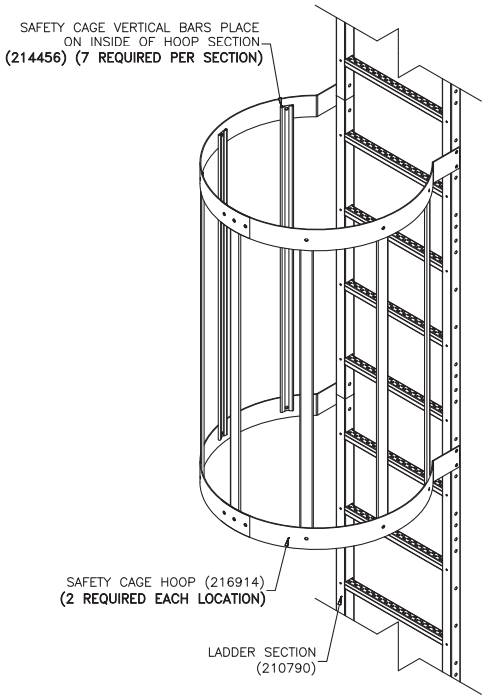
SAFETY CAGE VERTICAL BARS PLACE ON INSIDE OF HOOP SECTION
(214456) (7 REQUIRED PER SECTION)
SAFETY CAGE HOOP (216914)
(2 REQUIRED EACH LOCATION)
LADDER SECTION (210790)
USE 5/16" X 3/4" [8 X 19] HEX HEAD BOLT (290001) AND HEX NUT (290010) FOR ALL CONNECTIONS SHOWN

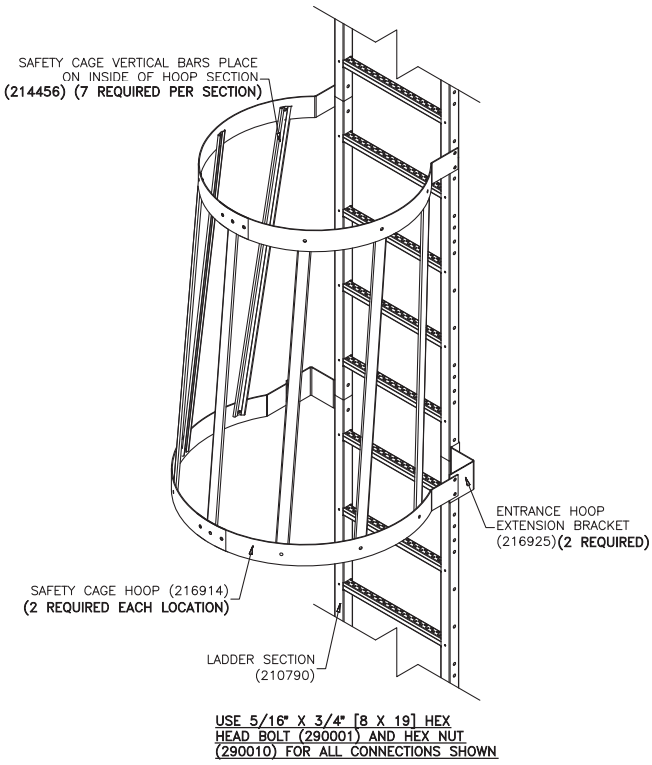
SAFETY CAGE VERTICAL BARS PLACE ON INSIDE OF HOOP SECTION
(214456) (7 REQUIRED PER SECTION)
ENTRANCE HOOP EXTENSION BRACKET (216925)(2 REQUIRED)
SAFETY CAGE HOOP (216914)
(2 REQUIRED EACH LOCATION)
LADDER SECTION (210790)
USE 5/16" X 3/4" [8 X 19] HEX HEAD BOLT (290001) AND HEX NUT (290010) FOR ALL CONNECTIONS SHOWN

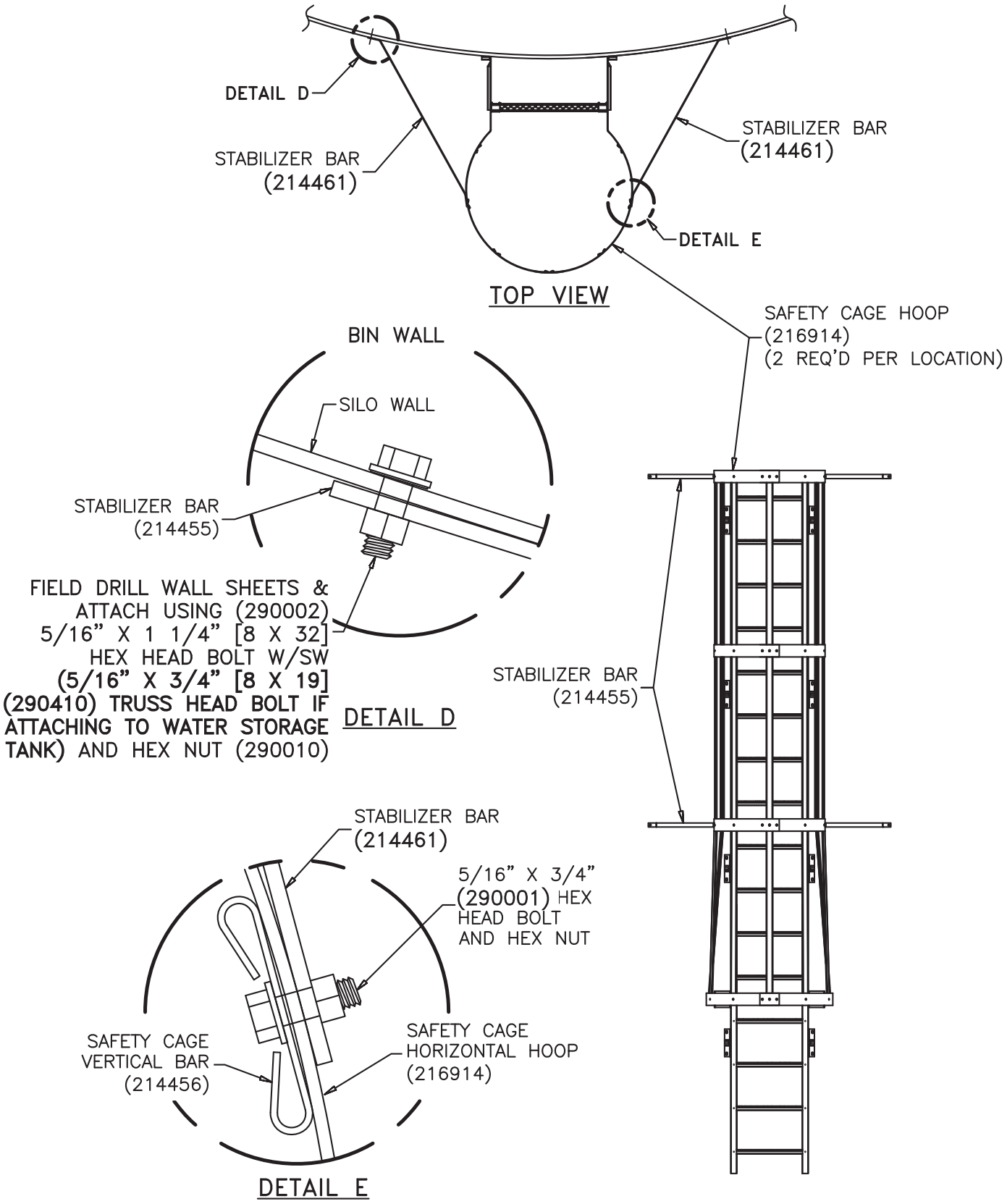
DETAIL D
STABILIZER BAR (214461)
STABILIZER BAR (214461)
DETAIL E
TOP VIEW
SAFETY CAGE HOOP (216914) (2 REQ'D PER LOCATION)
BIN WALL
SILO WALL
STABILIZER BAR (214455)
FIELD DRILL WALL SHEETS & ATTACH USING (290002) 5/16" X 1 1/4" [8 X 32] HEX HEAD BOLT W/SW (5/16" X 3/4" [8 X 19] (290410) TRUSS HEAD BOLT IF ATTACHING TO WATER STORAGE TANK) AND HEX NUT (290010)
DETAIL D
STABILIZER BAR (214455)
STABILIZER BAR (214461)
5/16" X 3/4" (290001) HEX HEAD BOLT AND HEX NUT
SAFETY CAGE VERTICAL BAR (214456)
SAFETY CAGE HORIZONTAL HOOP (216914)
DETAIL E

REST PLATFORM ASSEMBLY

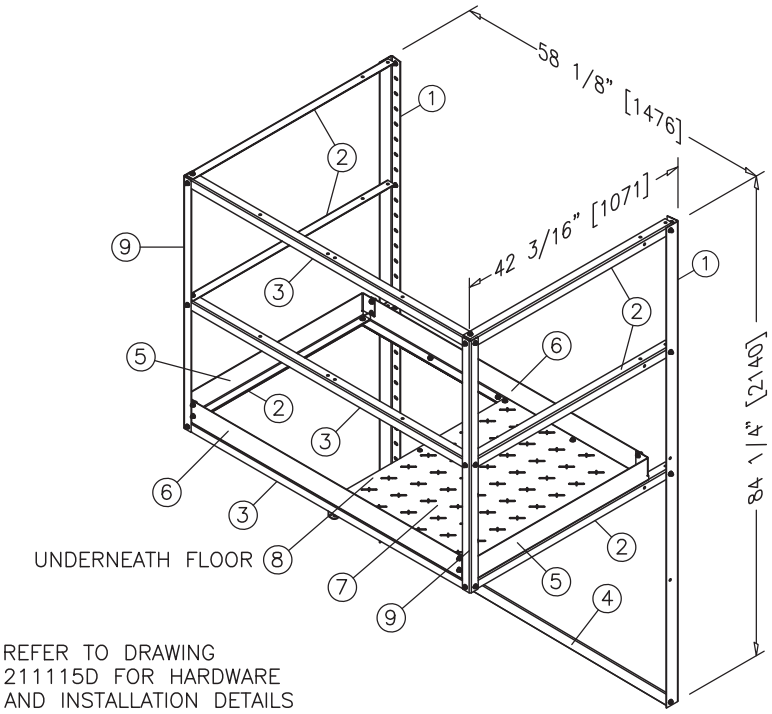

SPECIAL REST PLATFORM ASSEMBLY (HBT)

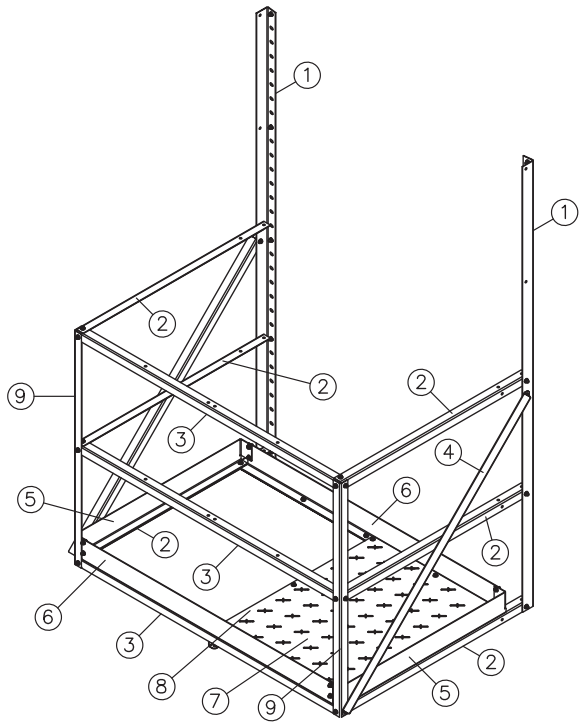

ITEM#	PART#	QTY	REV	DESCRIPTION
1	214320	2	F	GRAIN BIN REST PLATFORM MOUNTING BRACKET X 84 5/32"
2	214318	6	–	GRAIN BIN REST PLATFORM FRAME (RT. & LT.)
3	214317	4	B	GRAIN BIN REST PLATFORM FRAME (FR & BK)
4	2142363	2	–	PLATFORM KNEE BRACE ANGLE 12GA X 1 1/2" X 1 1/2" X 57 9/16"
5	214333	2	–	REST PLATFORM SIDE TOEBOARD
6	214341	2	–	REST PLATFORM FRONT/BACK TOEBOARD
7	214344	1	–	REST PLATFORM FLOOR PANEL
8	214345	1	–	REST PLATFORM SUPPORT CHANNEL
9	214316	2	B	GRAIN BIN REST PLATFORM HAND RAIL POST
10	290001	10	–	5/16" X 3/4" [8 X 19] HEX HEAD BOLT W/SW GRADE 8
11	290010	55	–	5/16" [8] SERRATED FLANGED HEX NUT
12	291291	41	–	5/16" X 3/4" [8 X 19] SERRATED FLANGE HEX HEAD BOLT GRADE 8
13	291377	4	–	5/16" X 1 1/4" [8 X 32] SERRATED FLANGE HEX HEAD BOLT GRADE 8

Note: This diagram illustrates platform and ladder spacing requirements for all silos.

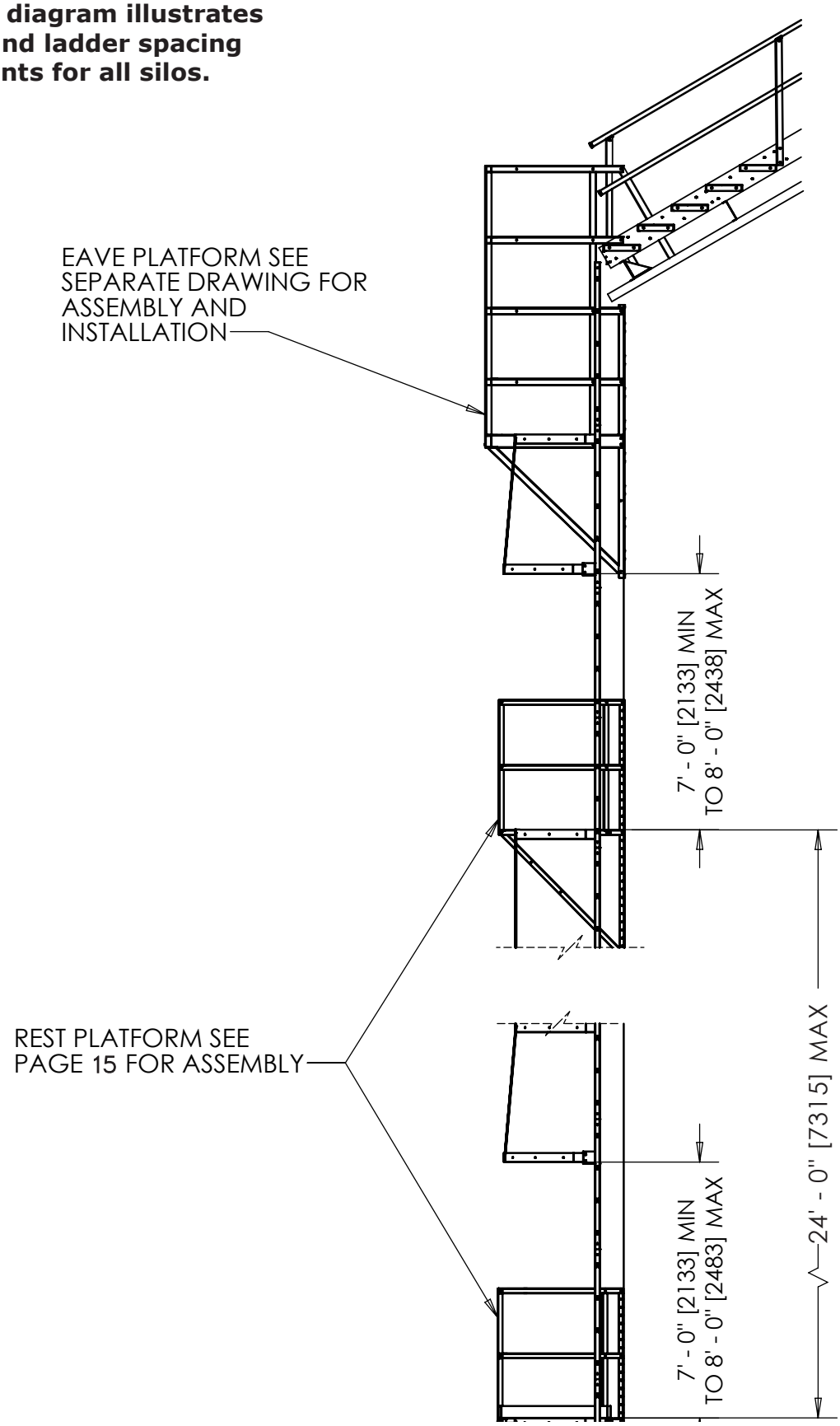

Rest Platform Locations By Eave Height

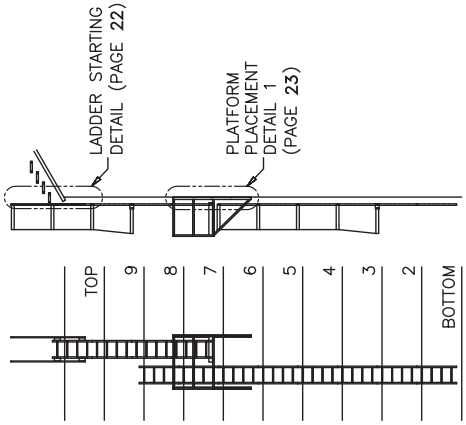

36' EAVE HEIGHT

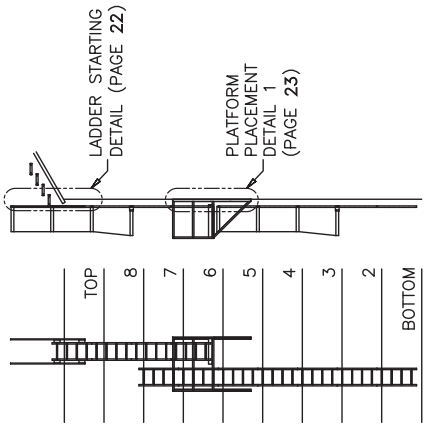

32' EAVE HEIGHT

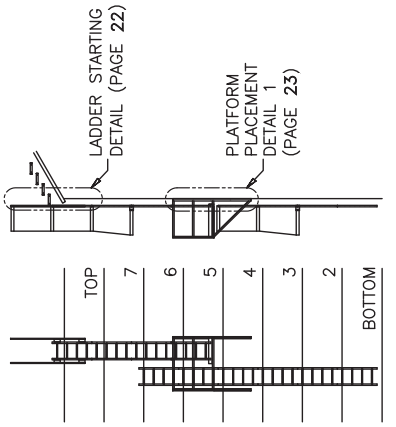

28' EAVE HEIGHT

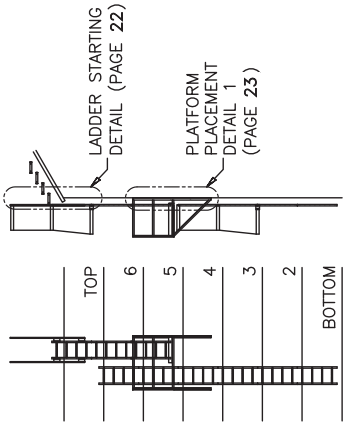

25' EAVE HEIGHT

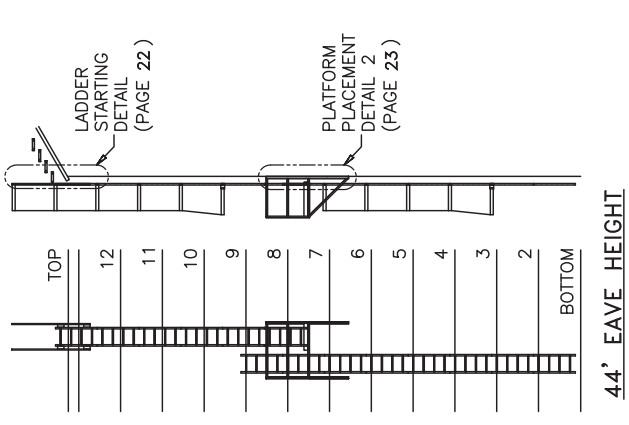

44' EAVE HEIGHT

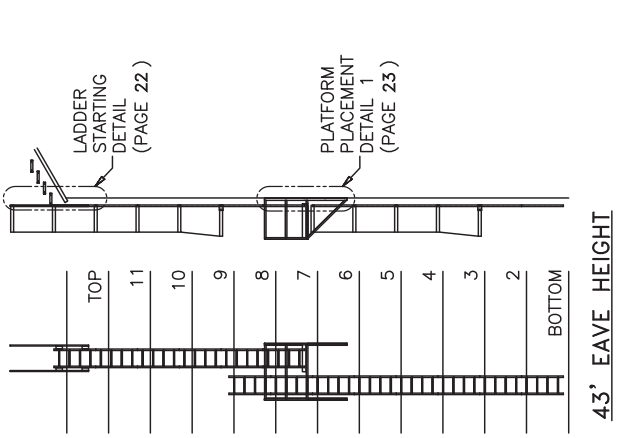

43' EAVE HEIGHT

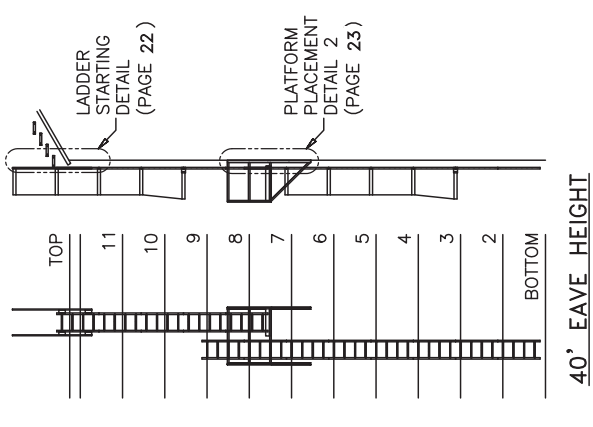

40' EAVE HEIGHT

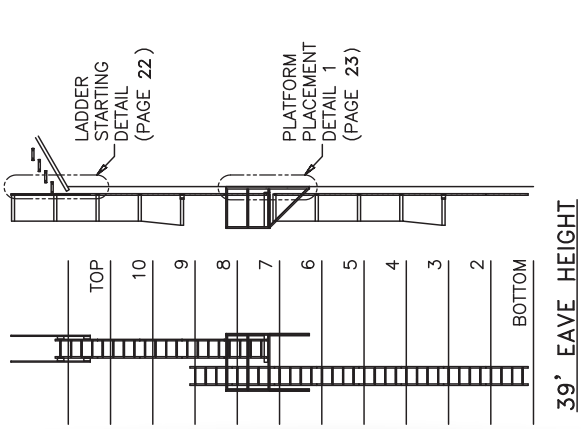

39' EAVE HEIGHT

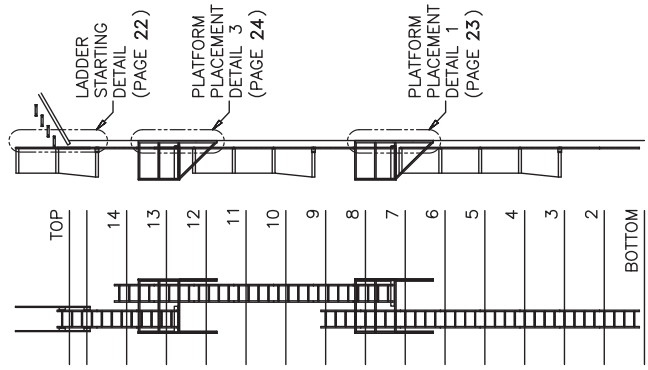

52' EAVE HEIGHT

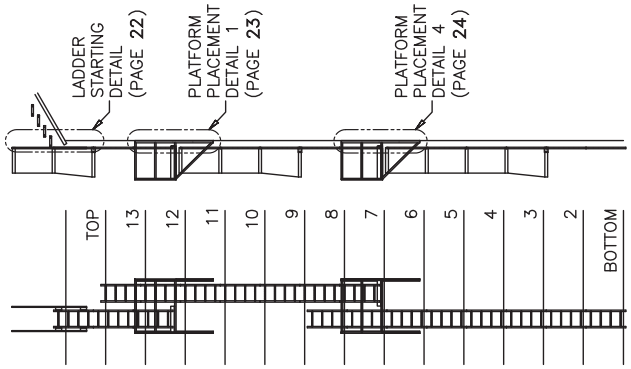

50' EAVE HEIGHT

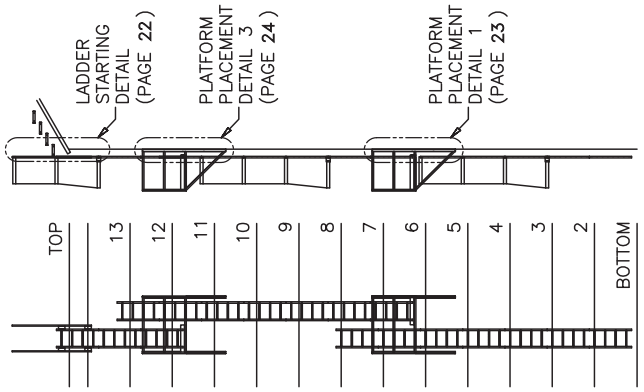

48' EAVE HEIGHT

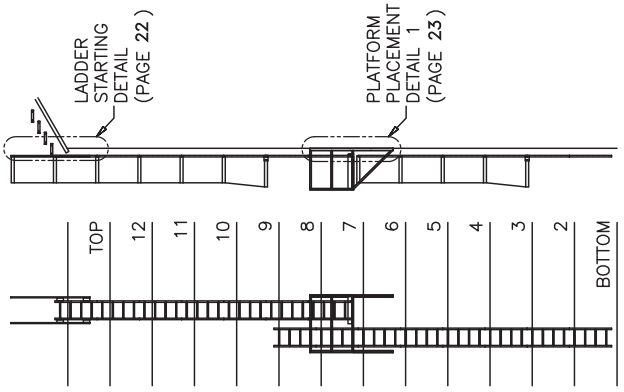

46' EAVE HEIGHT

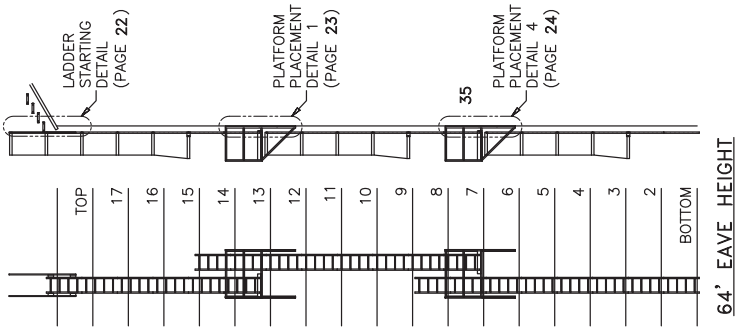

64' EAVE HEIGHT

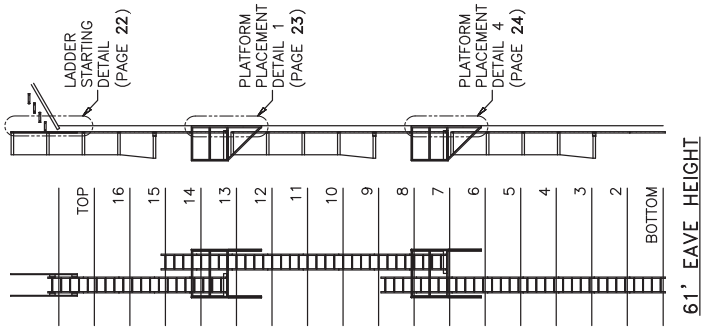

61' EAVE HEIGHT

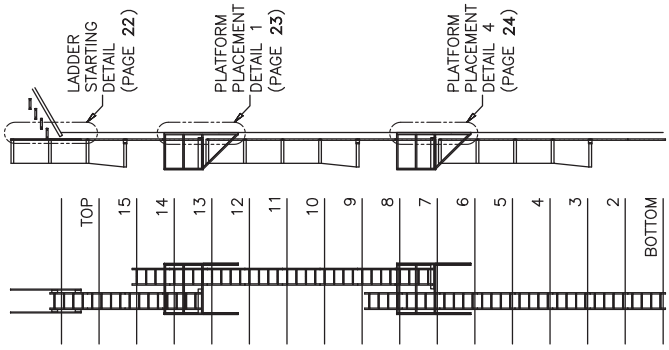

57' EAVE HEIGHT

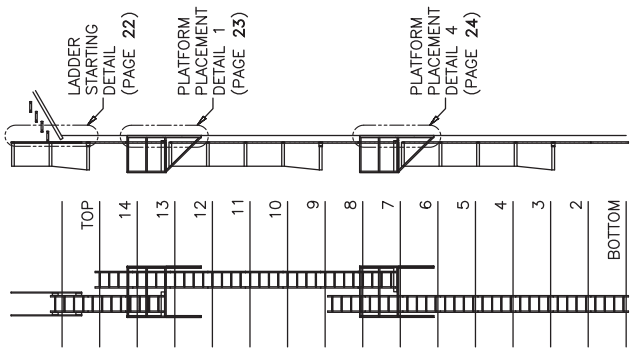

54' EAVE HEIGHT

Rest Platform Locations By Eave Height

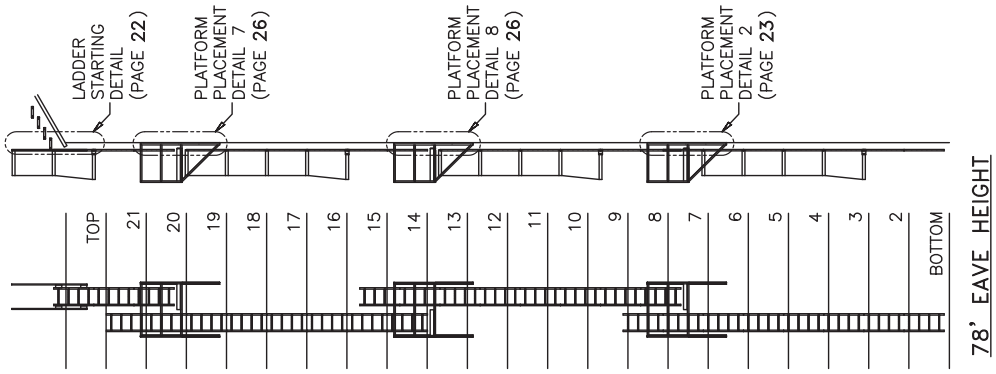

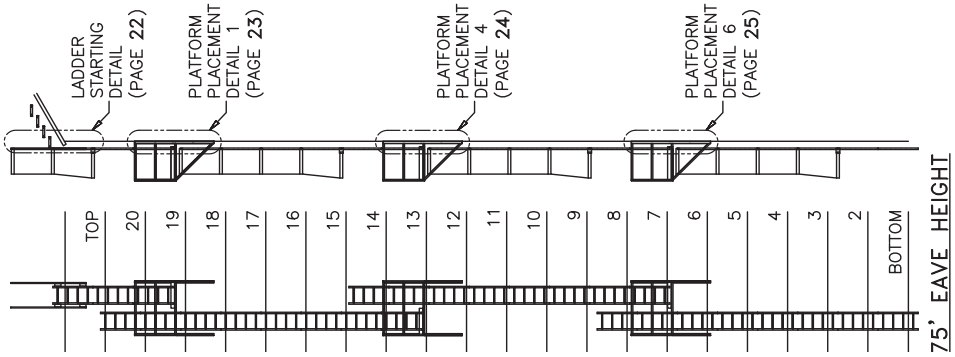

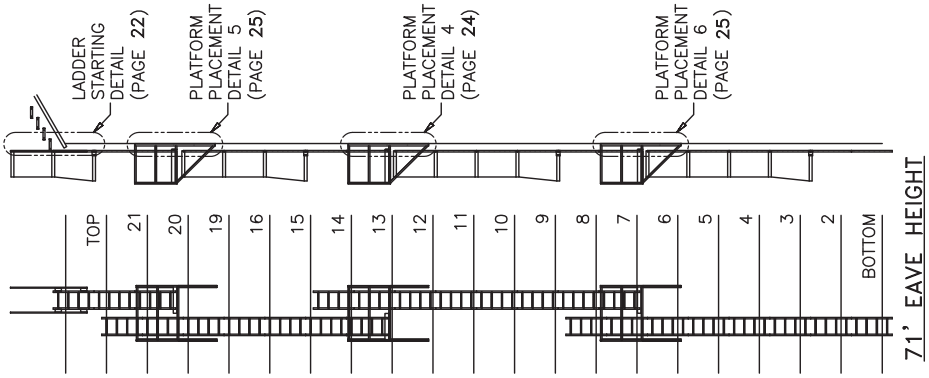

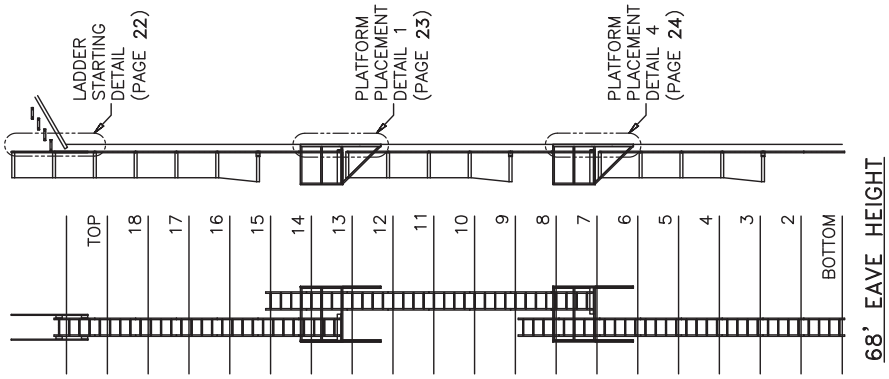

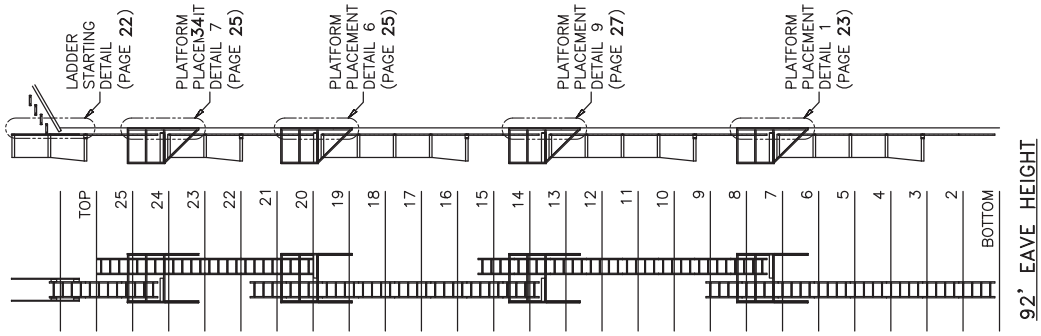

92' EAVE HEIGHT

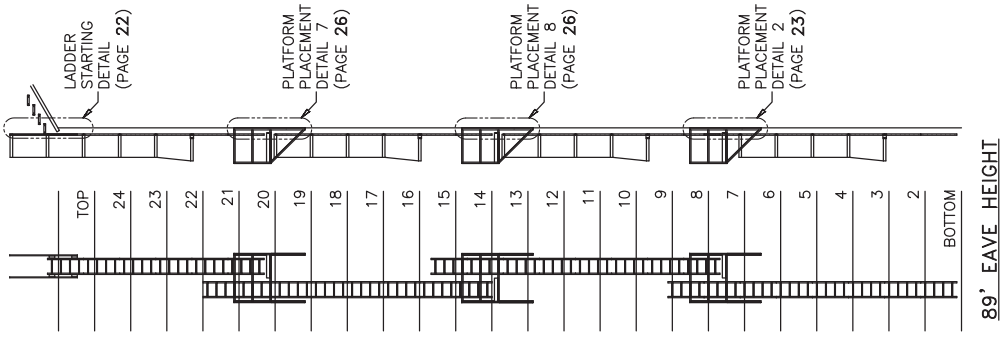

89' EAVE HEIGHT

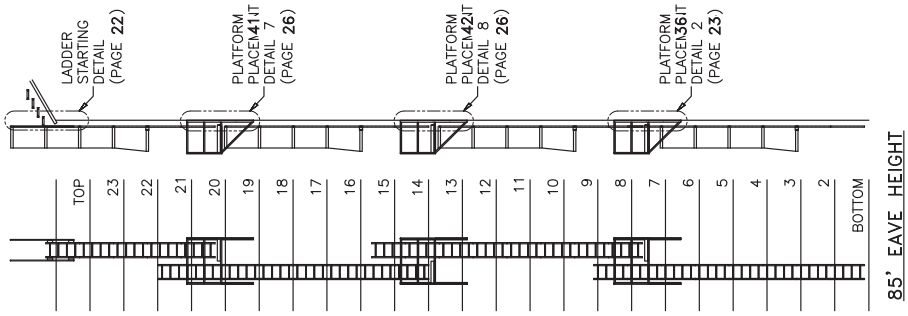

85' EAVE HEIGHT

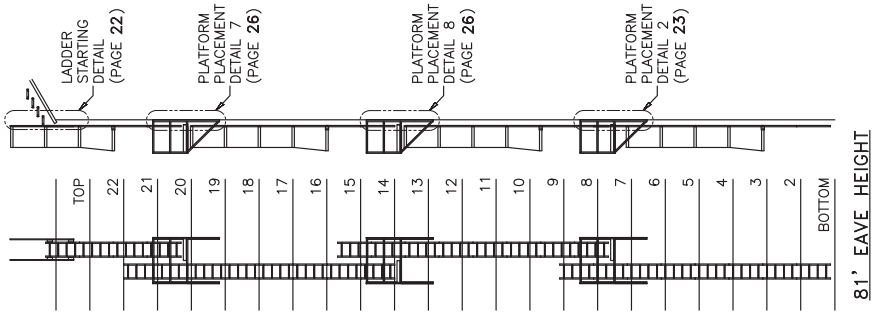

81' EAVE HEIGHT

Rest Platform Locations By Eave Height

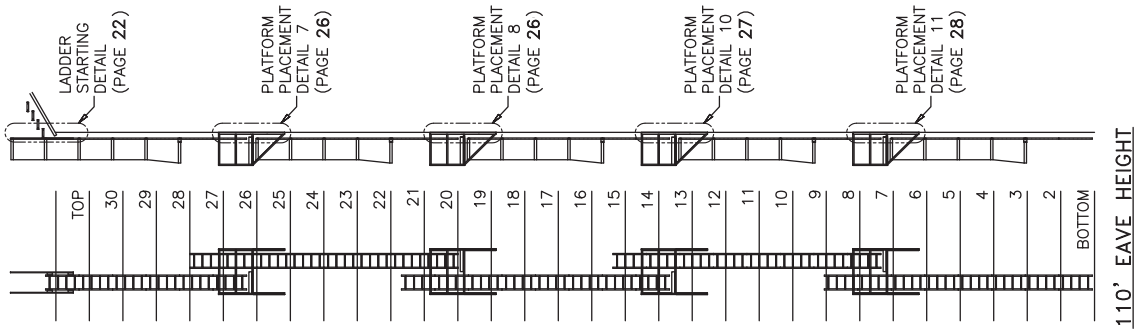

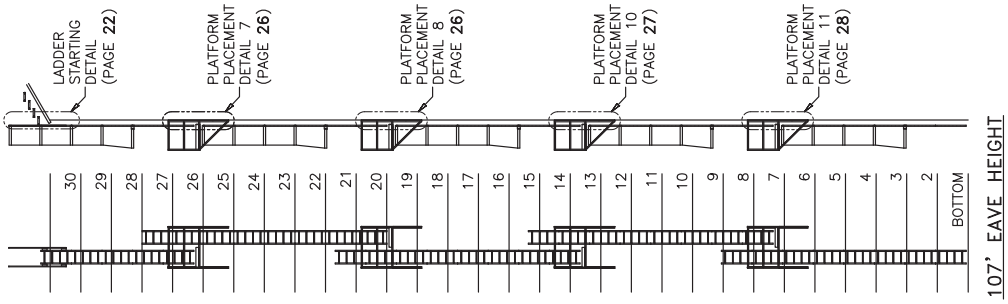

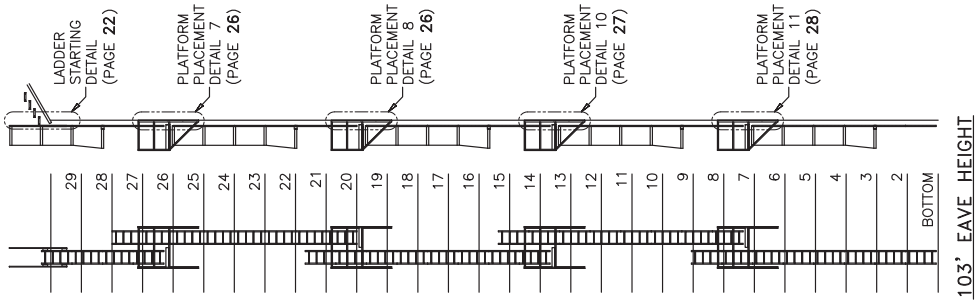

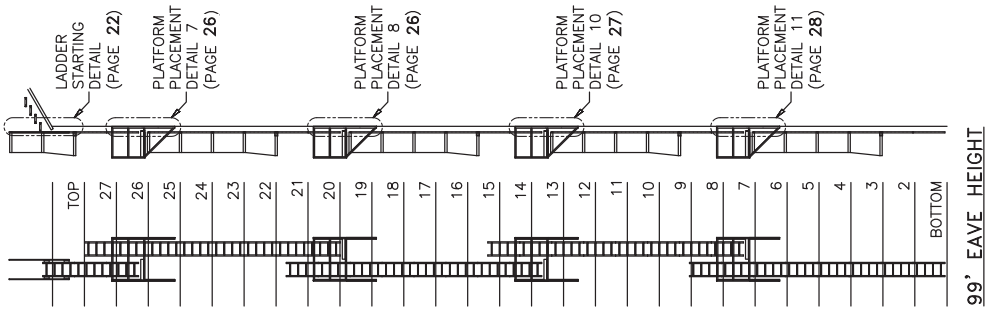

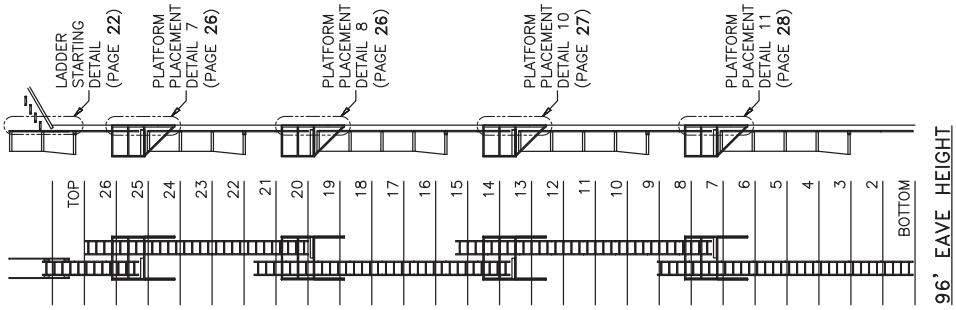

ROOF ASSEMBLY WITH ROOF STAIR

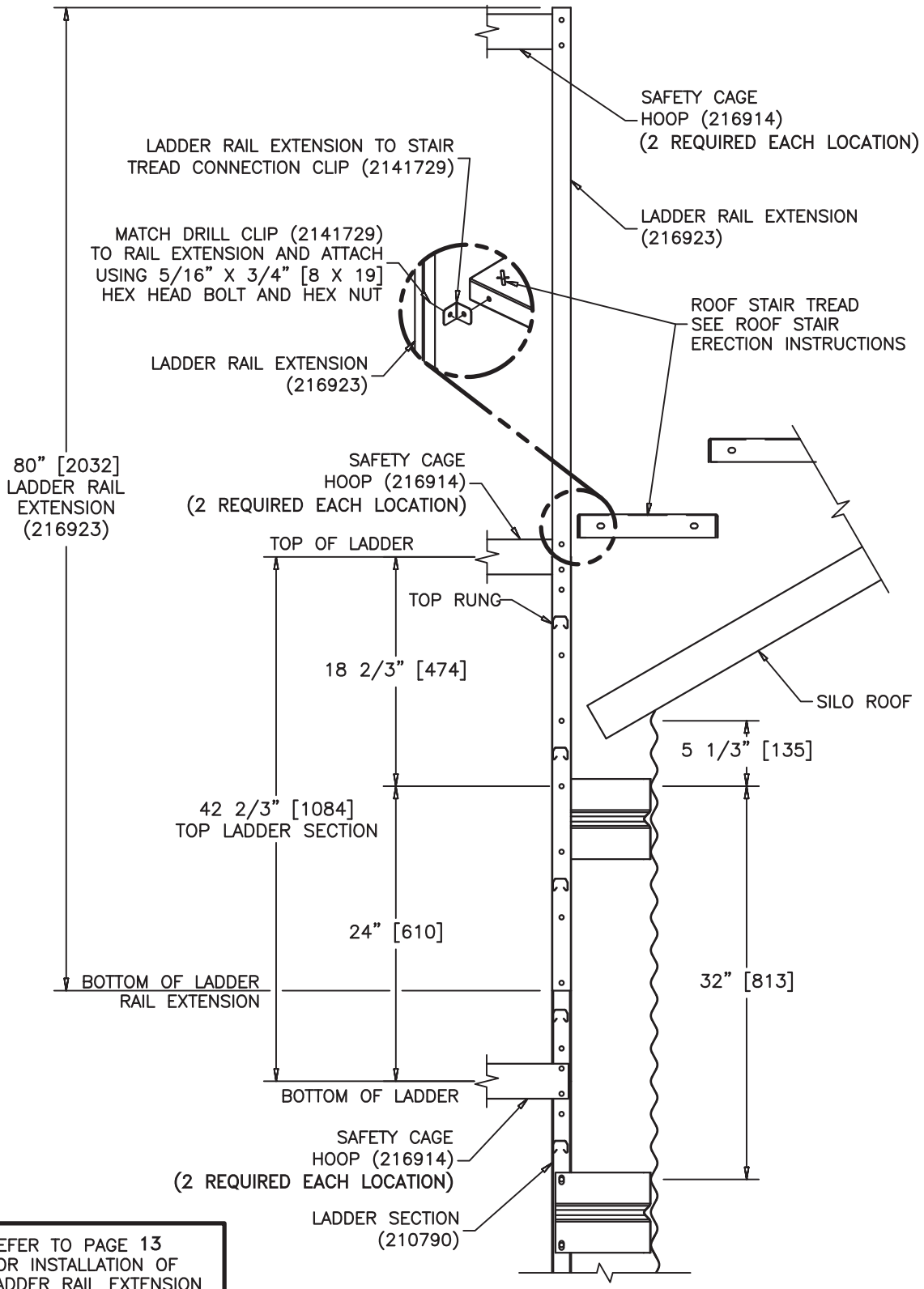

NOTE: REFER TO PAGE 13
FOR INSTALLATION OF
LADDER RAIL EXTENSION

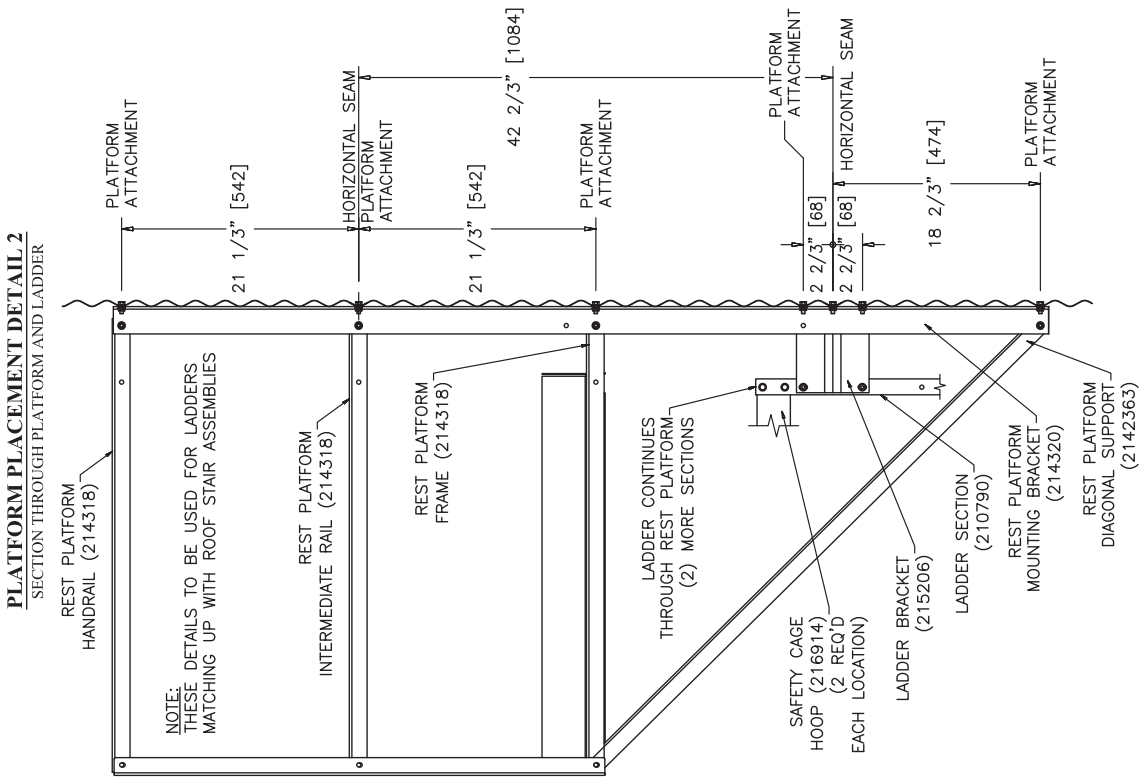
PLATFORM PLACEMENT DETAIL 2
SECTION THROUGH PLATFORM AND LADDER
PLATFORM ATTACHMENT
21 1/3" [542]
HORIZONTAL SEAM
PLATFORM ATTACHMENT
21 1/3" [542]
42 2/3" [1084]
PLATFORM ATTACHMENT
PLATFORM ATTACHMENT
2 2/3" [68]
2 2/3" [68]
HORIZONTAL SEAM
18 2/3" [474]
PLATFORM ATTACHMENT
REST PLATFORM HANDRAIL (214318)
NOTE:
THESE DETAILS TO BE USED FOR LADDERS MATCHING UP WITH ROOF STAIR ASSEMBLIES
REST PLATFORM INTERMEDIATE RAIL (214318)
REST PLATFORM FRAME (214318)
LADDER CONTINUES THROUGH REST PLATFORM (2) MORE SECTIONS
SAFETY CAGE HOOP (216914) (2 REQ'D EACH LOCATION)
LADDER BRACKET (215206)
LADDER SECTION (210790)
REST PLATFORM MOUNTING BRACKET (214320)
REST PLATFORM DIAGONAL SUPPORT (2142363)

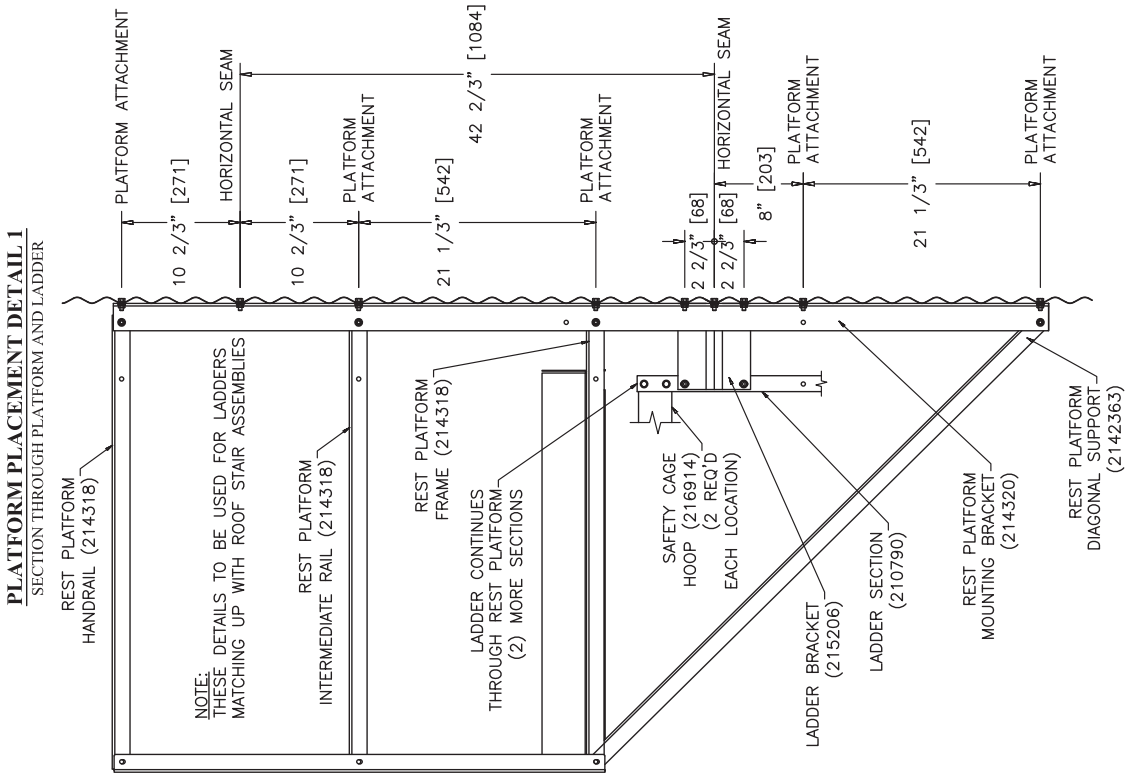
PLATFORM PLACEMENT DETAIL 1
SECTION THROUGH PLATFORM AND LADDER
PLATFORM ATTACHMENT
10 2/3" [271]
HORIZONTAL SEAM
10 2/3" [271]
PLATFORM ATTACHMENT
21 1/3" [542]
42 2/3" [1084]
PLATFORM ATTACHMENT
2 2/3" [68]
2 2/3" [68]
HORIZONTAL SEAM
8" [203]
PLATFORM ATTACHMENT
21 1/3" [542]
PLATFORM ATTACHMENT
REST PLATFORM HANDRAIL (214318)
NOTE:
THESE DETAILS TO BE USED FOR LADDERS MATCHING UP WITH ROOF STAIR ASSEMBLIES
REST PLATFORM INTERMEDIATE RAIL (214318)
REST PLATFORM FRAME (214318)
LADDER CONTINUES THROUGH REST PLATFORM (2) MORE SECTIONS
SAFETY CAGE HOOP (216914) (2 REQ'D EACH LOCATION)
LADDER BRACKET (215206)
LADDER SECTION (210790)
REST PLATFORM MOUNTING BRACKET (214320)
REST PLATFORM DIAGONAL SUPPORT (2142363)

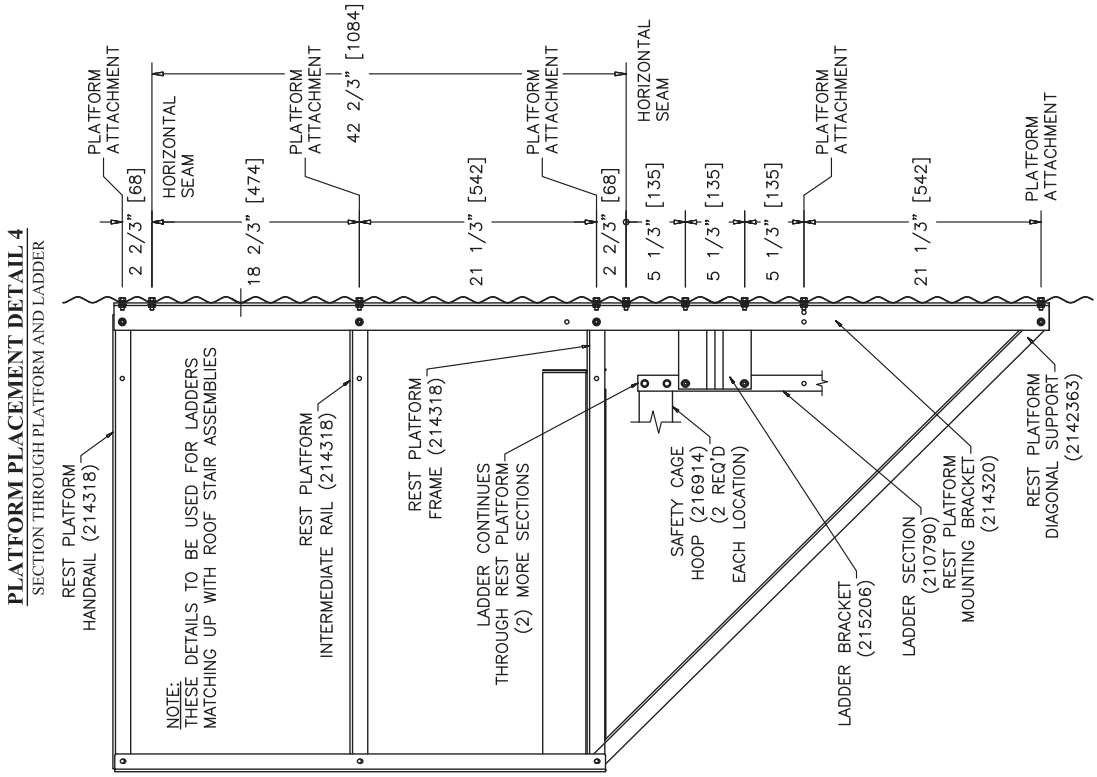
PLATFORM PLACEMENT DETAIL 4
SECTION THROUGH PLATFORM AND LADDER
PLATFORM ATTACHMENT
HORIZONTAL SEAM
PLATFORM ATTACHMENT
42 2/3" [1084]
PLATFORM ATTACHMENT
HORIZONTAL SEAM
PLATFORM ATTACHMENT
PLATFORM ATTACHMENT
2 2/3" [68]
18 2/3" [474]
21 1/3" [542]
2 2/3" [68]
5 1/3" [135]
5 1/3" [135]
5 1/3" [135]
21 1/3" [542]
REST PLATFORM HANDRAIL (214318)
NOTE:
THESE DETAILS TO BE USED FOR LADDERS MATCHING UP WITH ROOF STAIR ASSEMBLIES
REST PLATFORM INTERMEDIATE RAIL (214318)
REST PLATFORM FRAME (214318)
LADDER CONTINUES THROUGH REST PLATFORM (2) MORE SECTIONS
SAFETY CAGE HOOP (216914) (2 REQ'D EACH LOCATION)
LADDER BRACKET (215206)
LADDER SECTION (210790)
REST PLATFORM MOUNTING BRACKET (214320)
REST PLATFORM DIAGONAL SUPPORT (2142363)

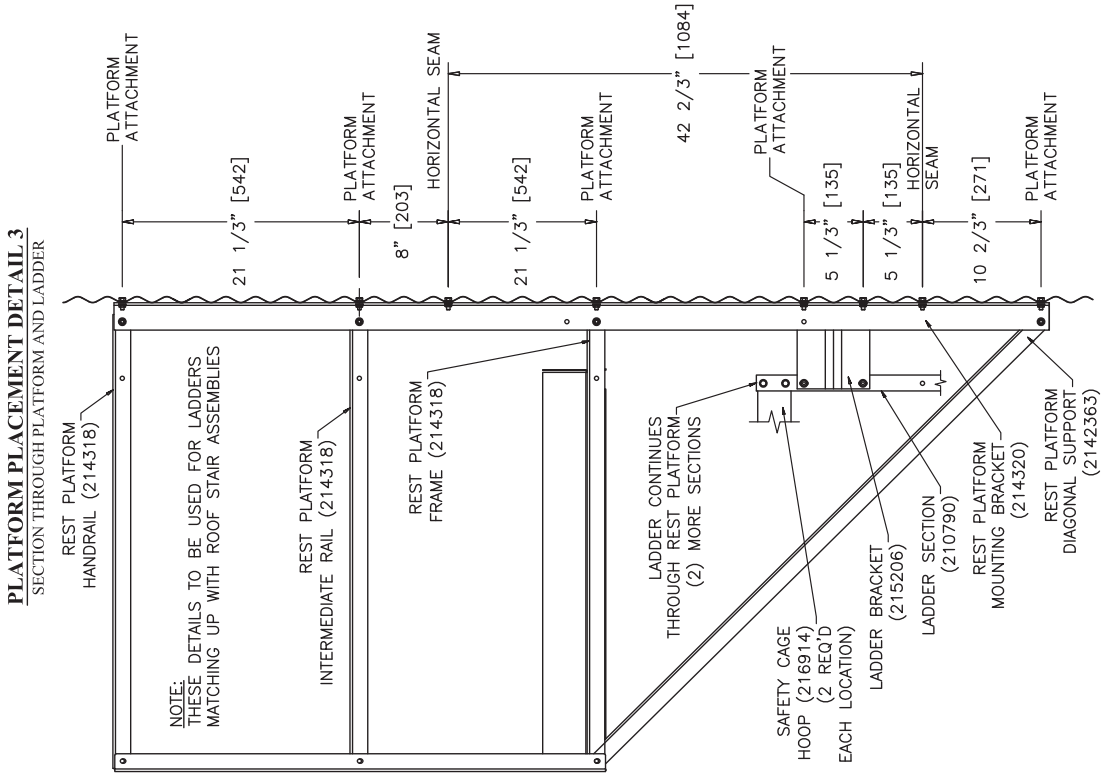
PLATFORM PLACEMENT DETAIL 3
SECTION THROUGH PLATFORM AND LADDER
PLATFORM ATTACHMENT
PLATFORM ATTACHMENT
HORIZONTAL SEAM
42 2/3" [1084]
PLATFORM ATTACHMENT
HORIZONTAL SEAM
PLATFORM ATTACHMENT
PLATFORM ATTACHMENT
21 1/3" [542]
8" [203]
21 1/3" [542]
5 1/3" [135]
5 1/3" [135]
10 2/3" [271]
REST PLATFORM HANDRAIL (214318)
NOTE:
THESE DETAILS TO BE USED FOR LADDERS MATCHING UP WITH ROOF STAIR ASSEMBLIES
REST PLATFORM INTERMEDIATE RAIL (214318)
REST PLATFORM FRAME (214318)
LADDER CONTINUES THROUGH REST PLATFORM (2) MORE SECTIONS
SAFETY CAGE HOOP (216914) (2 REQ'D EACH LOCATION)
LADDER BRACKET (215206)
LADDER SECTION (210790)
REST PLATFORM MOUNTING BRACKET (214320)
REST PLATFORM DIAGONAL SUPPORT (2142363)

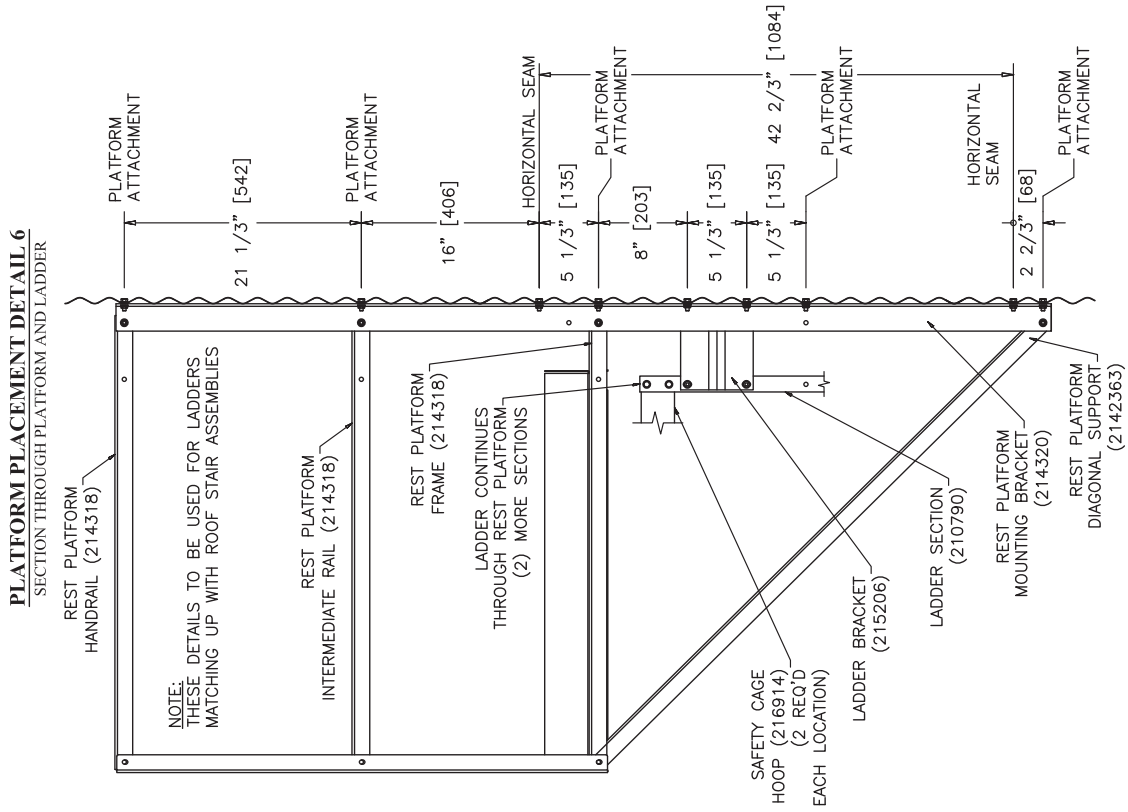
PLATFORM PLACEMENT DETAIL 6
SECTION THROUGH PLATFORM AND LADDER
PLATFORM ATTACHMENT
21 1/3" [542]
PLATFORM ATTACHMENT
16" [406]
HORIZONTAL SEAM
5 1/3" [135]
PLATFORM ATTACHMENT
8" [203]
5 1/3" [135]
5 1/3" [135]
42 2/3" [1084]
PLATFORM ATTACHMENT
HORIZONTAL SEAM
2 2/3" [68]
PLATFORM ATTACHMENT
REST PLATFORM HANDRAIL (214318)
NOTE:
THESE DETAILS TO BE USED FOR LADDERS MATCHING UP WITH ROOF STAIR ASSEMBLIES
REST PLATFORM INTERMEDIATE RAIL (214318)
REST PLATFORM FRAME (214318)
LADDER CONTINUES THROUGH REST PLATFORM (2) MORE SECTIONS
SAFETY CAGE HOOP (216914) (2 REQ'D EACH LOCATION)
LADDER BRACKET (215206)
LADDER SECTION (210790)
REST PLATFORM MOUNTING BRACKET (214320)
REST PLATFORM DIAGONAL SUPPORT (2142363)

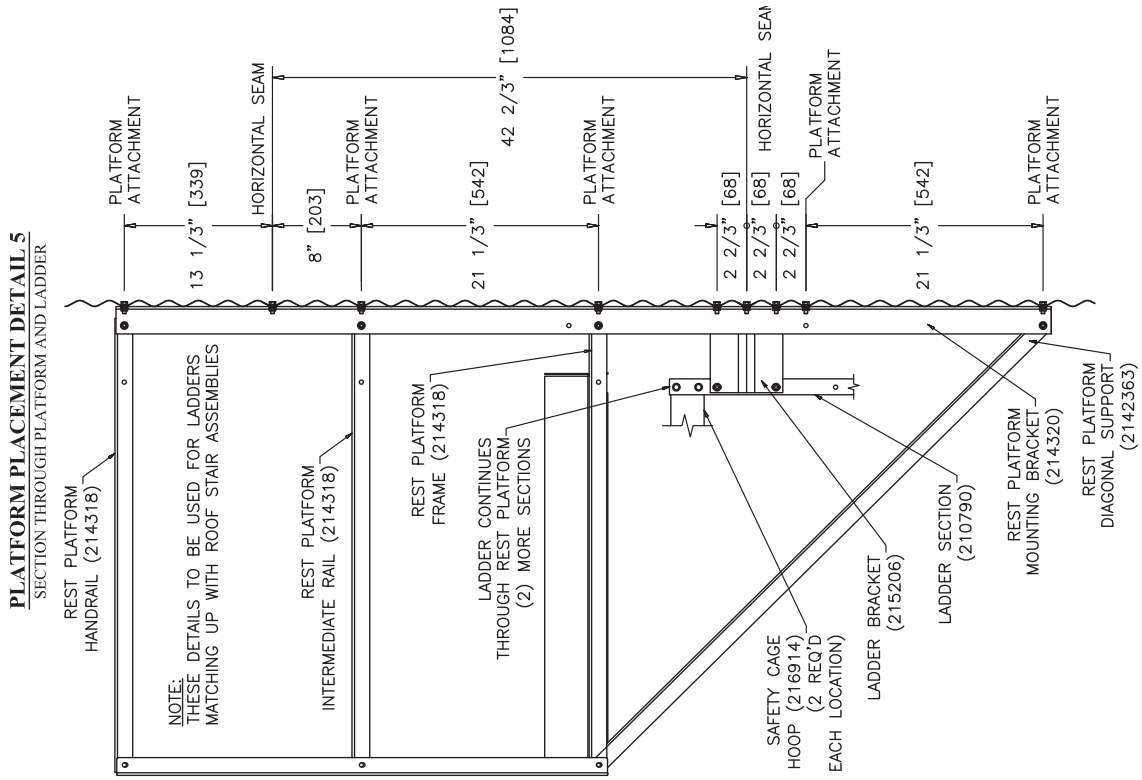
PLATFORM PLACEMENT DETAIL 5
SECTION THROUGH PLATFORM AND LADDER
PLATFORM ATTACHMENT
13 1/3" [339]
HORIZONTAL SEAM
8" [203]
PLATFORM ATTACHMENT
21 1/3" [542]
42 2/3" [1084]
PLATFORM ATTACHMENT
2 2/3" [68]
2 2/3" [68]
HORIZONTAL SEAM
2 2/3" [68]
PLATFORM ATTACHMENT
21 1/3" [542]
PLATFORM ATTACHMENT
REST PLATFORM HANDRAIL (214318)
NOTE:
THESE DETAILS TO BE USED FOR LADDERS MATCHING UP WITH ROOF STAIR ASSEMBLIES
REST PLATFORM INTERMEDIATE RAIL (214318)
REST PLATFORM FRAME (214318)
LADDER CONTINUES THROUGH REST PLATFORM (2) MORE SECTIONS
SAFETY CAGE HOOP (216914) (2 REQ'D EACH LOCATION)
LADDER BRACKET (215206)
LADDER SECTION (210790)
REST PLATFORM MOUNTING BRACKET (214320)
REST PLATFORM DIAGONAL SUPPORT (2142363)

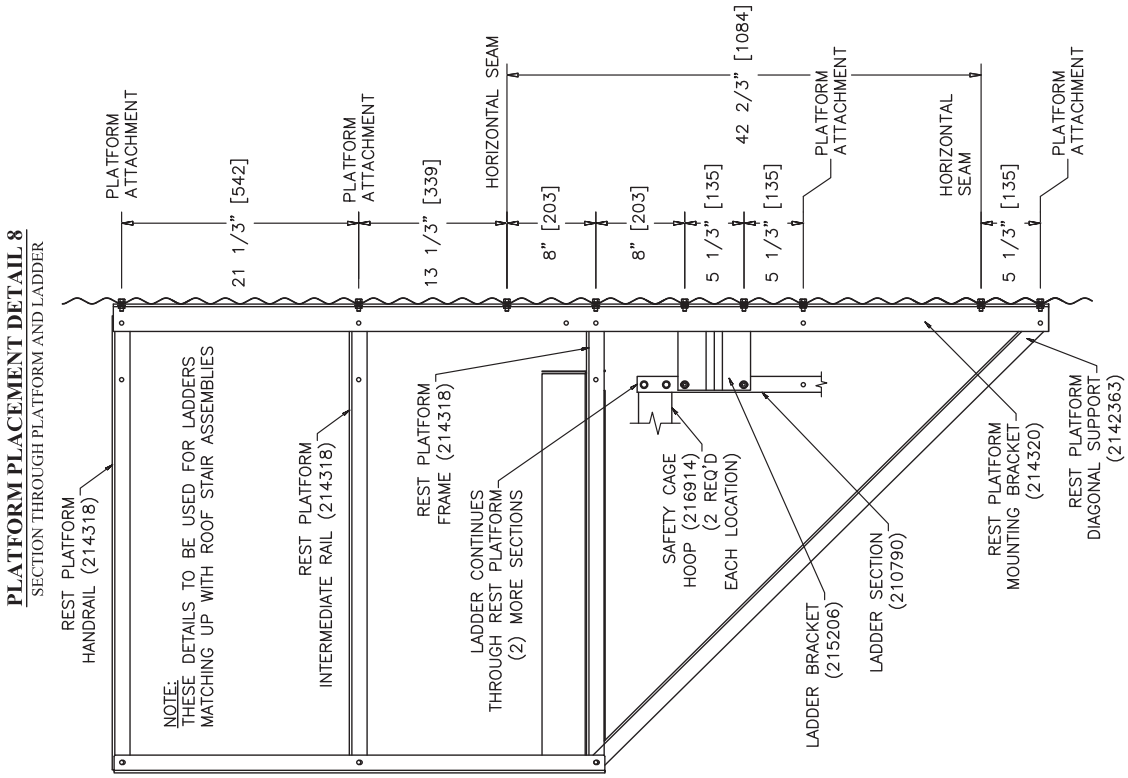
PLATFORM PLACEMENT DETAIL 8
SECTION THROUGH PLATFORM AND LADDER
REST PLATFORM HANDRAIL (214318)
NOTE: THESE DETAILS TO BE USED FOR LADDERS MATCHING UP WITH ROOF STAIR ASSEMBLIES
REST PLATFORM INTERMEDIATE RAIL (214318)
REST PLATFORM FRAME (214318)
LADDER CONTINUES THROUGH REST PLATFORM (2) MORE SECTIONS
SAFETY CAGE HOOP (216914) (2 REQ'D EACH LOCATION)
LADDER BRACKET (215206)
LADDER SECTION (210790)
REST PLATFORM MOUNTING BRACKET (214320)
REST PLATFORM DIAGONAL SUPPORT (2142363)
PLATFORM ATTACHMENT
21 1/3" [542]
PLATFORM ATTACHMENT
13 1/3" [339]
HORIZONTAL SEAM
8" [203]
8" [203]
5 1/3" [135]
5 1/3" [135]
42 2/3" [1084]
PLATFORM ATTACHMENT
HORIZONTAL SEAM
5 1/3" [135]
PLATFORM ATTACHMENT

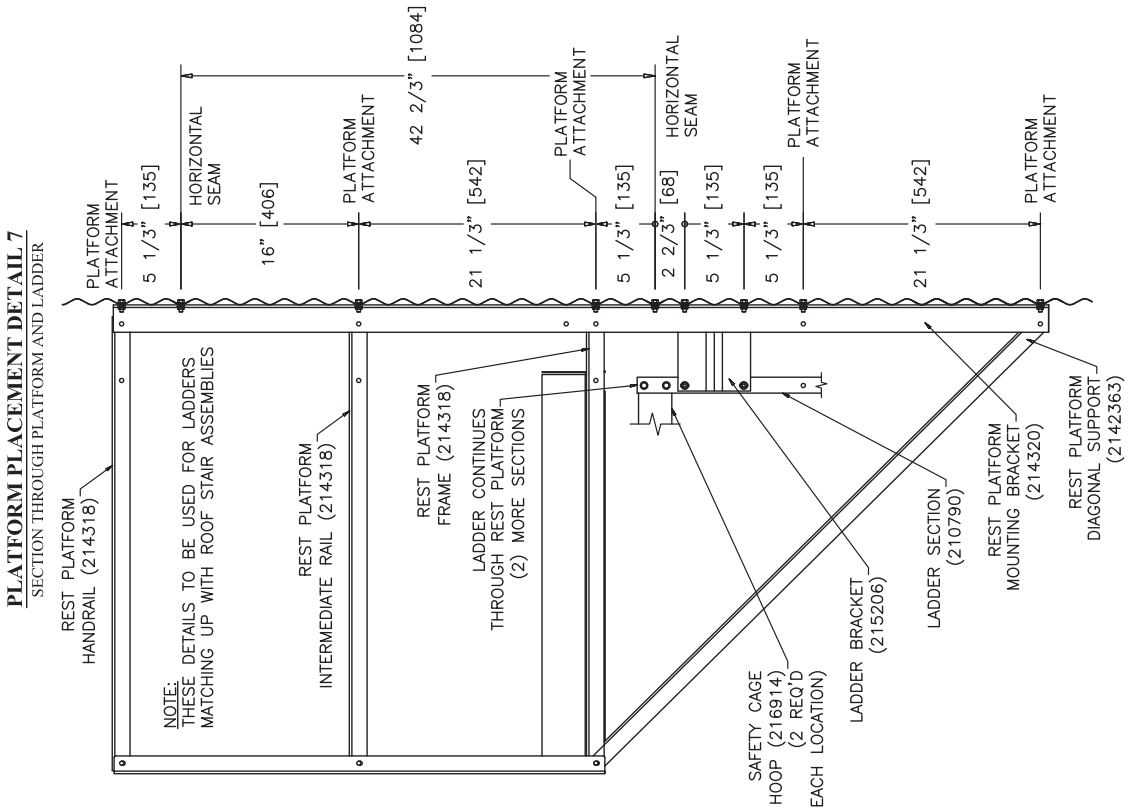
PLATFORM PLACEMENT DETAIL 7
SECTION THROUGH PLATFORM AND LADDER
REST PLATFORM HANDRAIL (214318)
NOTE: THESE DETAILS TO BE USED FOR LADDERS MATCHING UP WITH ROOF STAIR ASSEMBLIES
REST PLATFORM INTERMEDIATE RAIL (214318)
REST PLATFORM FRAME (214318)
LADDER CONTINUES THROUGH REST PLATFORM (2) MORE SECTIONS
SAFETY CAGE HOOP (216914) (2 REQ'D EACH LOCATION)
LADDER BRACKET (215206)
LADDER SECTION (210790)
REST PLATFORM MOUNTING BRACKET (214320)
REST PLATFORM DIAGONAL SUPPORT (2142363)
PLATFORM ATTACHMENT
5 1/3" [135]
HORIZONTAL SEAM
16" [406]
PLATFORM ATTACHMENT
21 1/3" [542]
42 2/3" [1084]
PLATFORM ATTACHMENT
5 1/3" [135]
2 2/3" [68]
HORIZONTAL SEAM
5 1/3" [135]
5 1/3" [135]
PLATFORM ATTACHMENT
21 1/3" [542]
PLATFORM ATTACHMENT

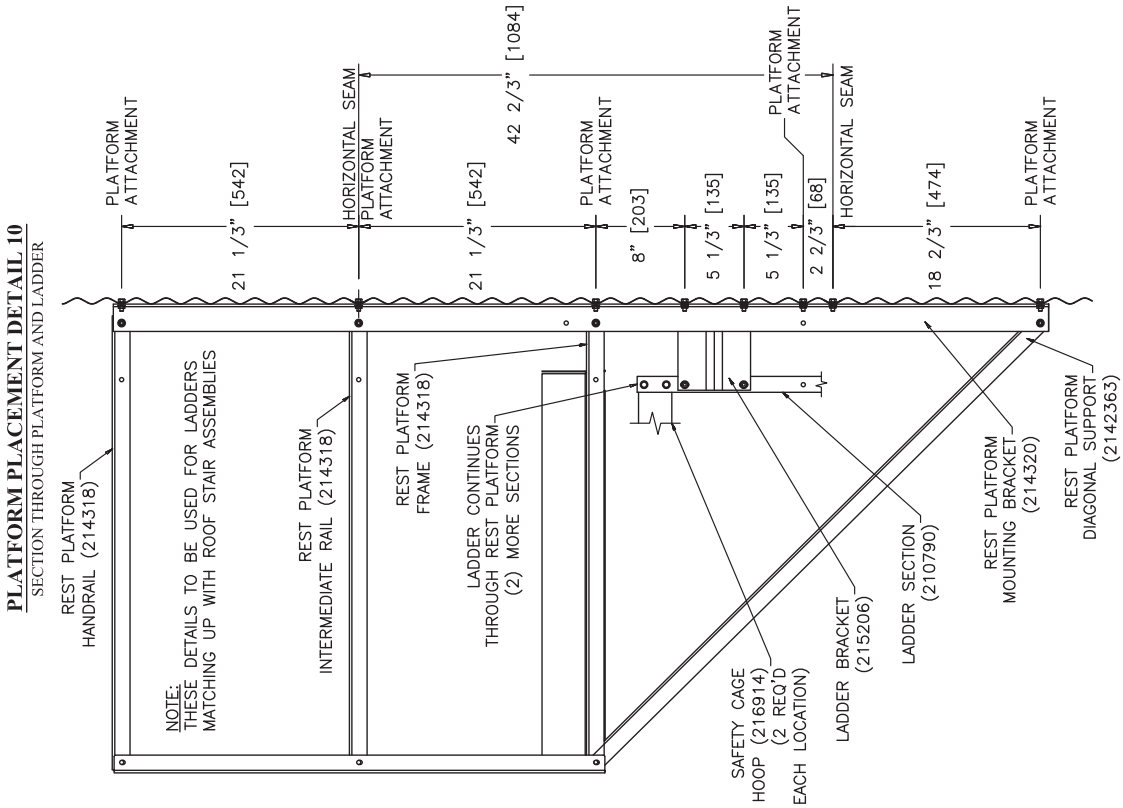
PLATFORM PLACEMENT DETAIL 10
SECTION THROUGH PLATFORM AND LADDER
PLATFORM ATTACHMENT
21 1/3" [542]
HORIZONTAL SEAM
PLATFORM ATTACHMENT
21 1/3" [542]
42 2/3" [1084]
PLATFORM ATTACHMENT
8" [203]
5 1/3" [135]
5 1/3" [135]
PLATFORM ATTACHMENT
2 2/3" [68]
HORIZONTAL SEAM
18 2/3" [474]
PLATFORM ATTACHMENT
REST PLATFORM HANDRAIL (214318)
NOTE:
THESE DETAILS TO BE USED FOR LADDERS MATCHING UP WITH ROOF STAIR ASSEMBLIES
REST PLATFORM INTERMEDIATE RAIL (214318)
REST PLATFORM FRAME (214318)
LADDER CONTINUES THROUGH REST PLATFORM (2) MORE SECTIONS
SAFETY CAGE HOOP (216914) (2 REQ'D EACH LOCATION)
LADDER BRACKET (215206)
LADDER SECTION (210790)
REST PLATFORM MOUNTING BRACKET (214320)
REST PLATFORM DIAGONAL SUPPORT (2142363)

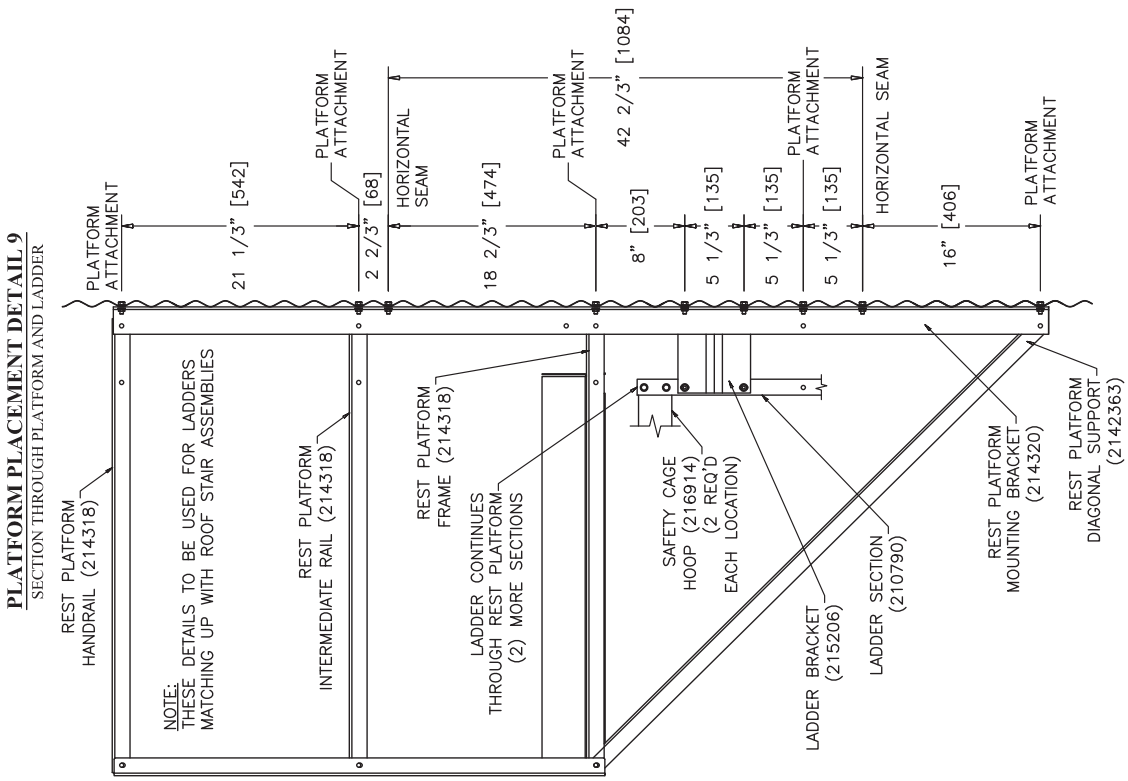
PLATFORM PLACEMENT DETAIL 9
SECTION THROUGH PLATFORM AND LADDER
PLATFORM ATTACHMENT
21 1/3" [542]
PLATFORM ATTACHMENT
2 2/3" [68]
HORIZONTAL SEAM
18 2/3" [474]
PLATFORM ATTACHMENT
42 2/3" [1084]
8" [203]
5 1/3" [135]
5 1/3" [135]
PLATFORM ATTACHMENT
5 1/3" [135]
HORIZONTAL SEAM
16" [406]
PLATFORM ATTACHMENT
REST PLATFORM HANDRAIL (214318)
NOTE:
THESE DETAILS TO BE USED FOR LADDERS MATCHING UP WITH ROOF STAIR ASSEMBLIES
REST PLATFORM INTERMEDIATE RAIL (214318)
REST PLATFORM FRAME (214318)
LADDER CONTINUES THROUGH REST PLATFORM (2) MORE SECTIONS
SAFETY CAGE HOOP (216914) (2 REQ'D EACH LOCATION)
LADDER BRACKET (215206)
LADDER SECTION (210790)
REST PLATFORM MOUNTING BRACKET (214320)
REST PLATFORM DIAGONAL SUPPORT (2142363)

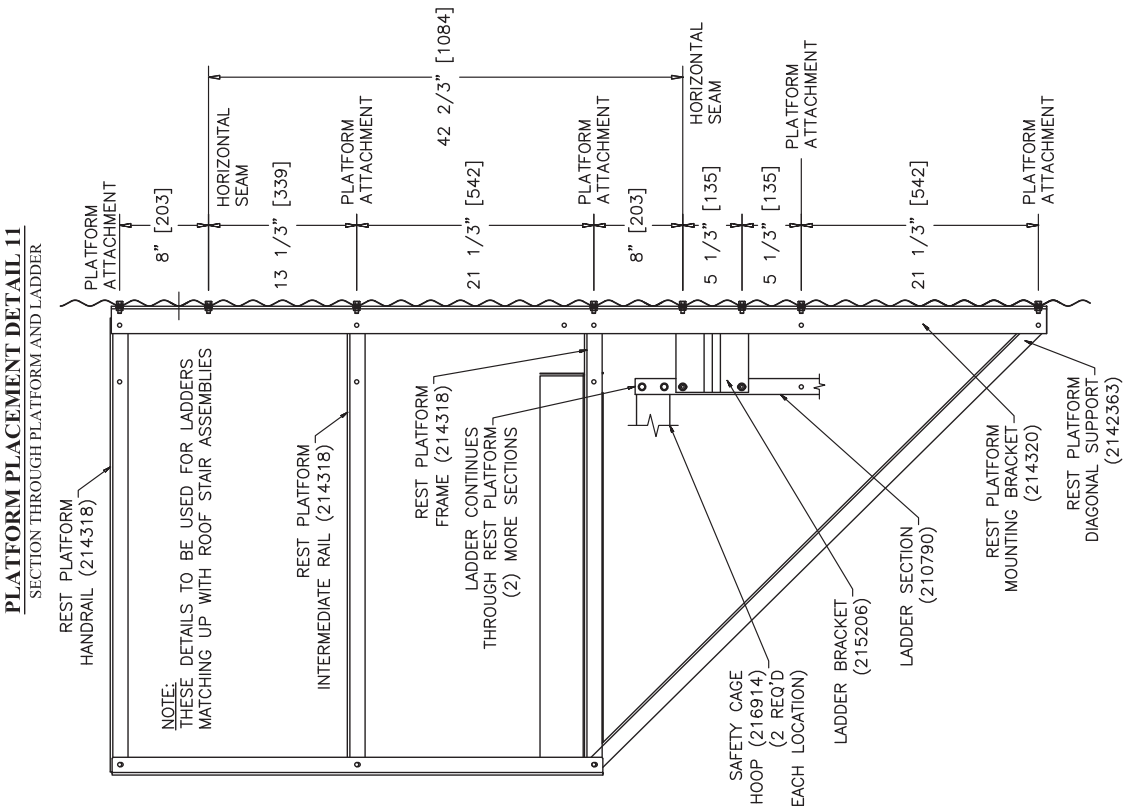
PLATFORM PLACEMENT DETAIL 11
SECTION THROUGH PLATFORM AND LADDER
PLATFORM ATTACHMENT
8" [203]
HORIZONTAL SEAM
13 1/3" [339]
PLATFORM ATTACHMENT
42 2/3" [1084]
21 1/3" [542]
PLATFORM ATTACHMENT
8" [203]
HORIZONTAL SEAM
5 1/3" [135]
5 1/3" [135]
PLATFORM ATTACHMENT
21 1/3" [542]
PLATFORM ATTACHMENT
REST PLATFORM HANDRAIL (214318)
NOTE:
THESE DETAILS TO BE USED FOR LADDERS MATCHING UP WITH ROOF STAIR ASSEMBLIES
REST PLATFORM INTERMEDIATE RAIL (214318)
REST PLATFORM FRAME (214318)
LADDER CONTINUES THROUGH REST PLATFORM (2) MORE SECTIONS
SAFETY CAGE HOOP (216914) (2 REQ'D EACH LOCATION)
LADDER BRACKET (215206)
LADDER SECTION (210790)
REST PLATFORM MOUNTING BRACKET (214320)
REST PLATFORM DIAGONAL SUPPORT (2142363)

Hopper Bottom Tank Ladder Assembly (No Access Door)

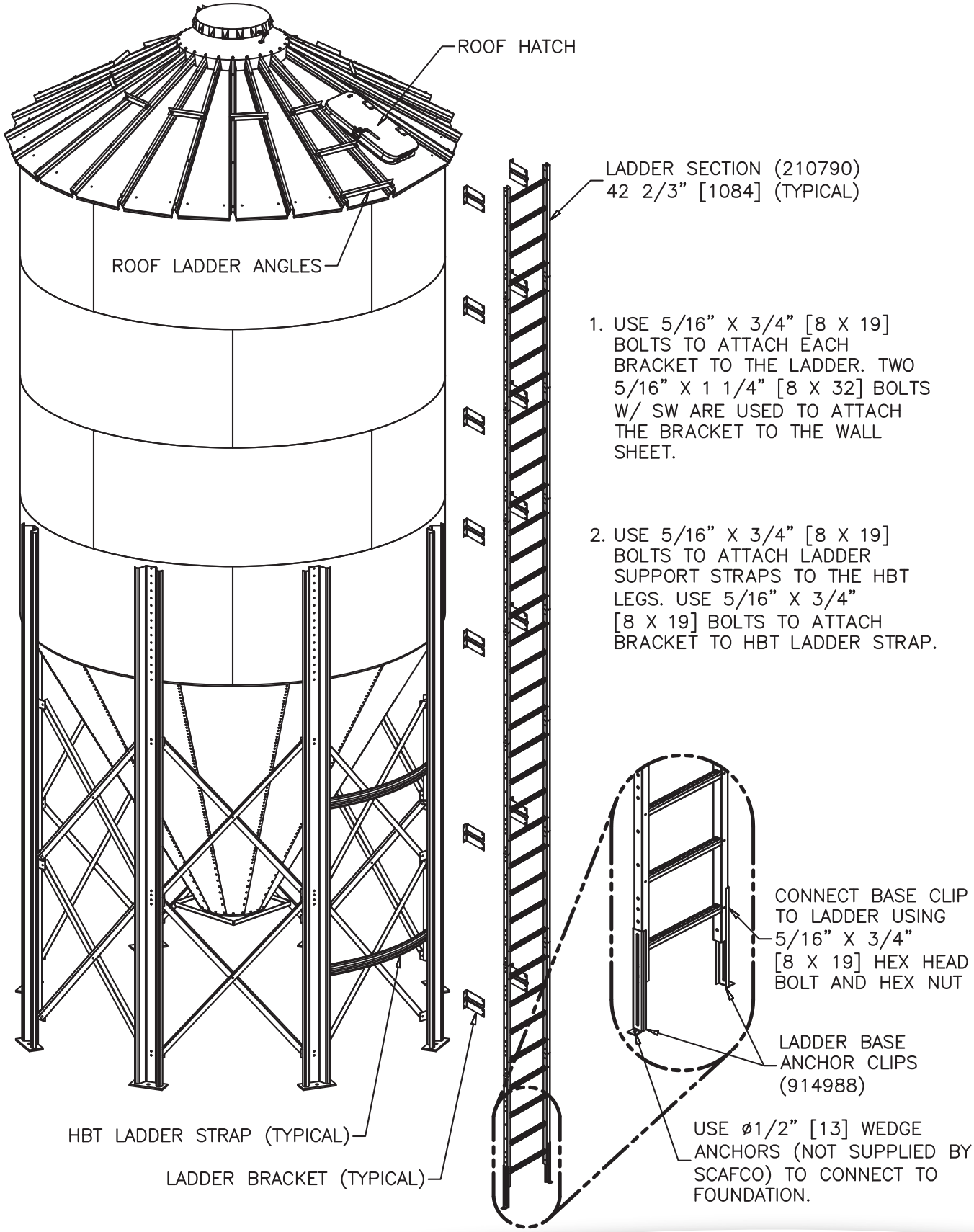

Rest Platform Locations For Specific HBTs

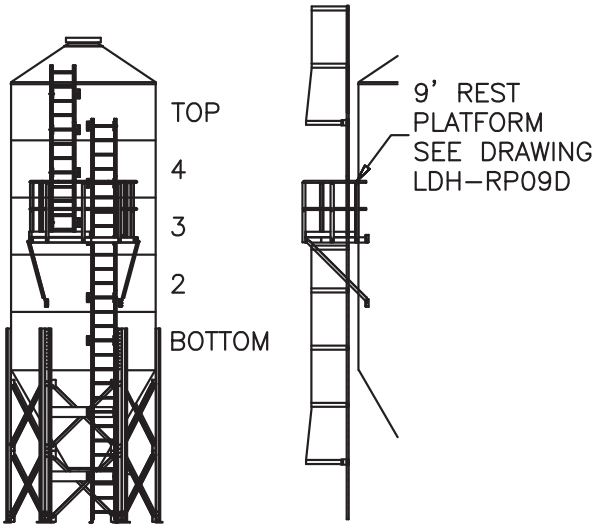

9605HBT

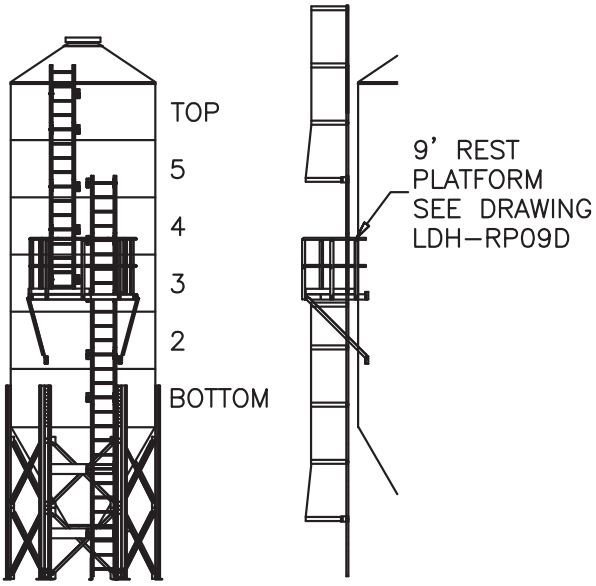

9606HBT

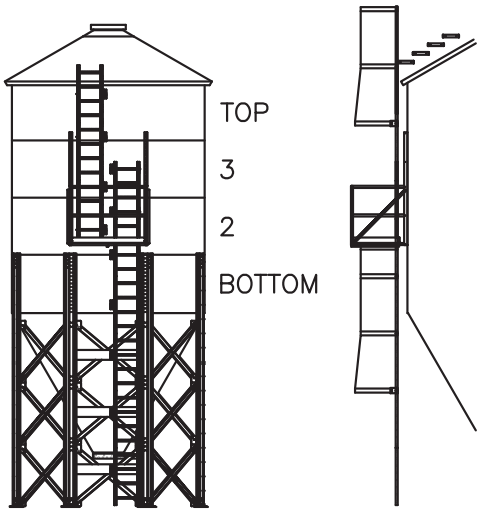

1204HBT–60

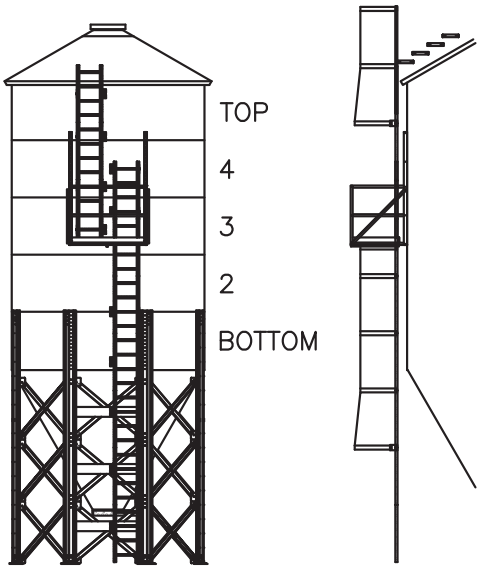

1205HBT–60

Rest Platform Locations For Specific HBTs

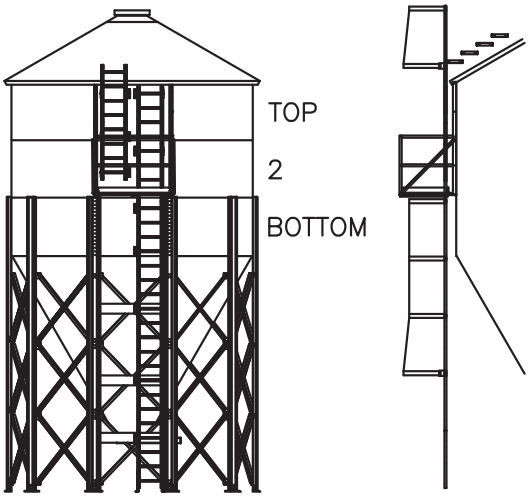

1503HBT–60

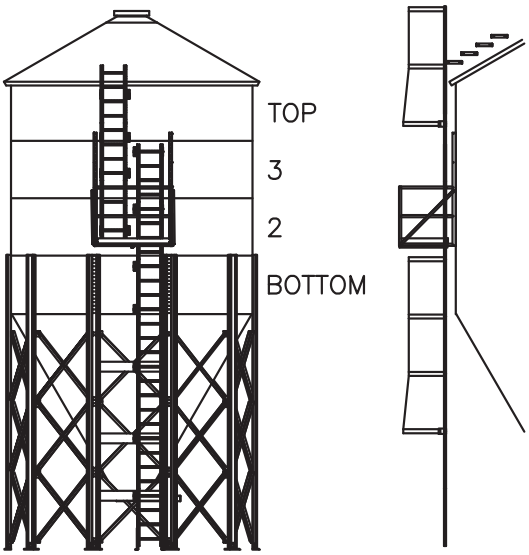

1504HBT–60

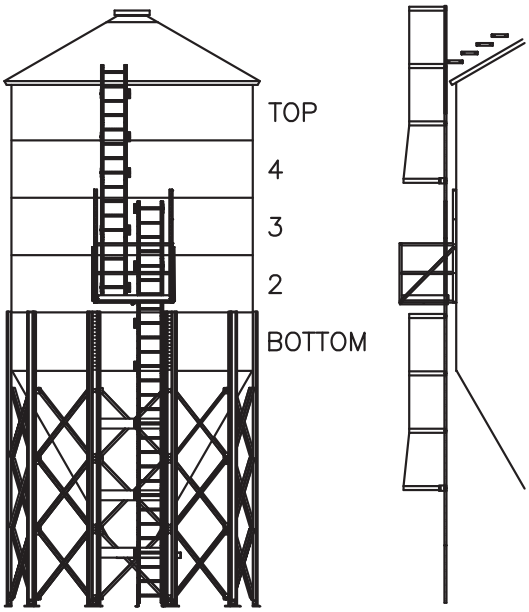

1505HBT–60

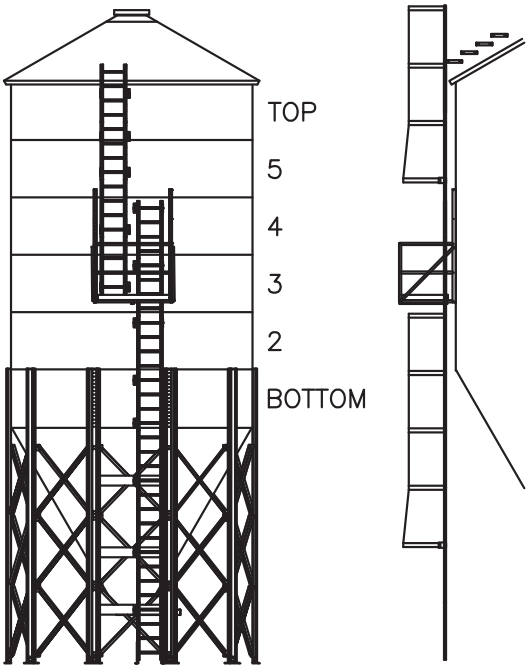

1506HBT–60

Rest Platform Locations For Specific HBTs

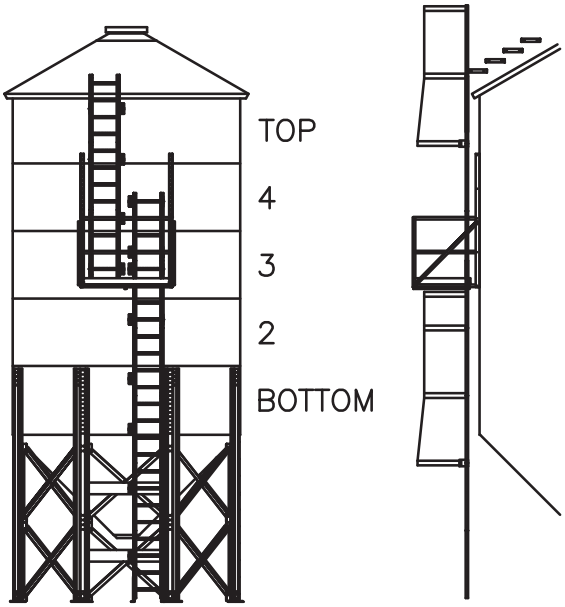

1205HBT

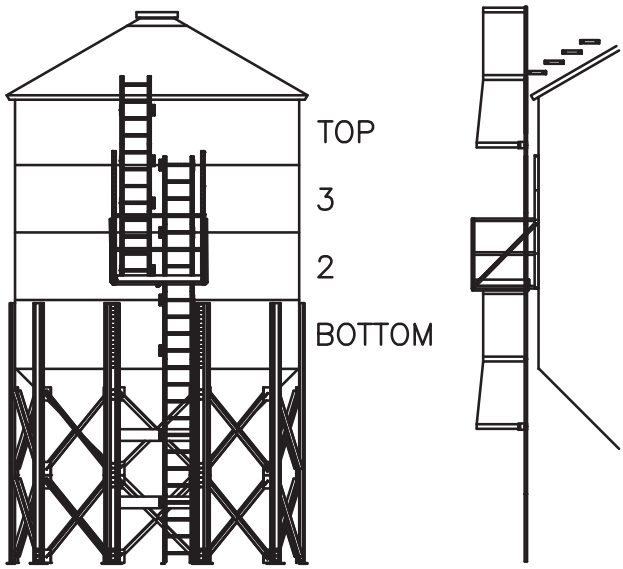

1504HBT

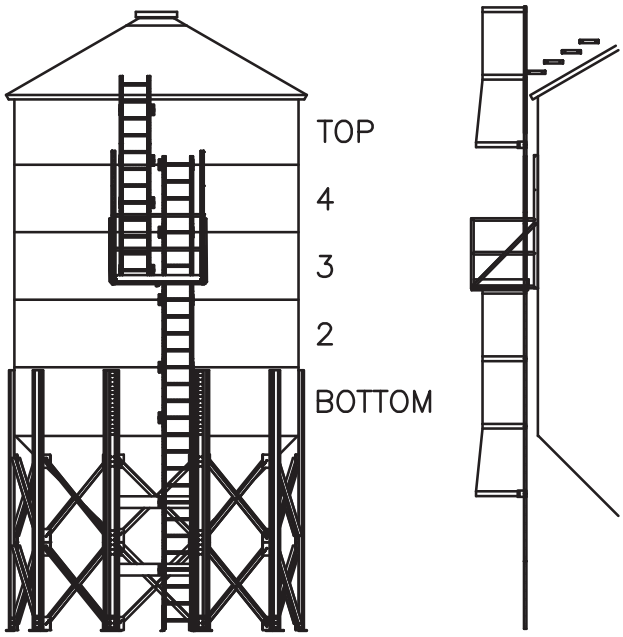

1505HBT

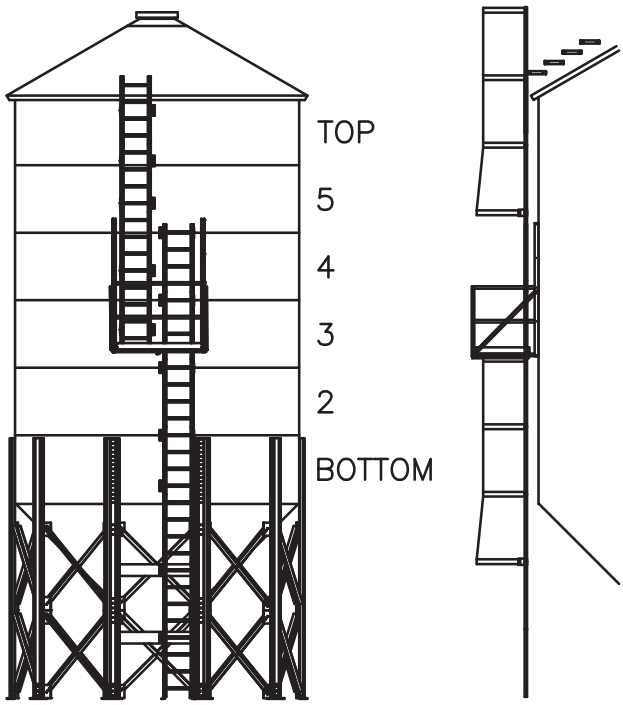

1506HBT

Rest Platform Locations For Specific HBTs

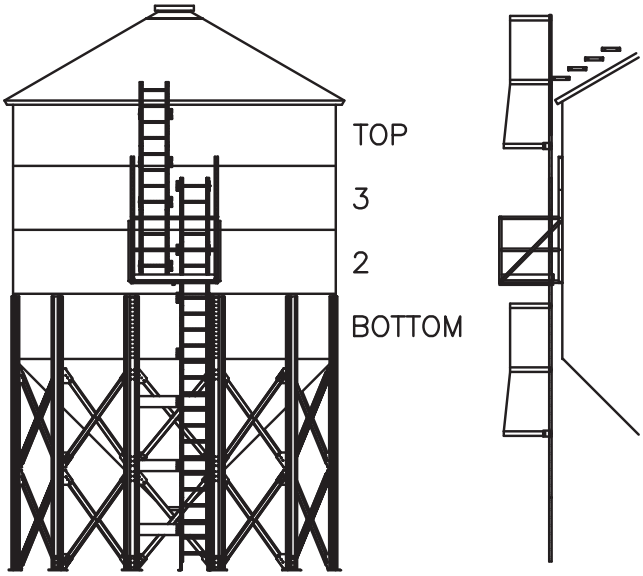

1804HBT

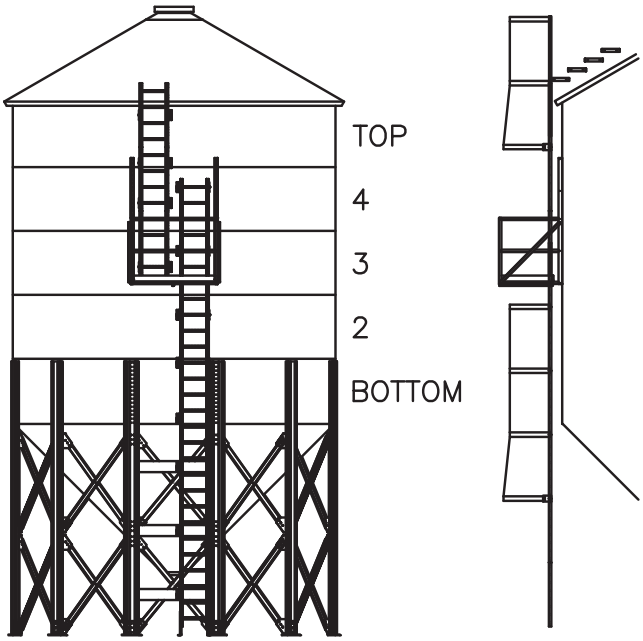

1805HBT

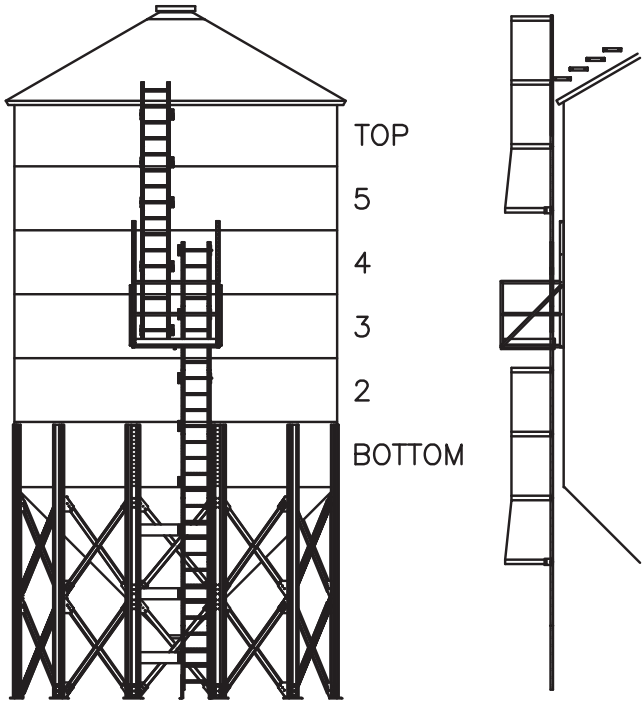

1806HBT

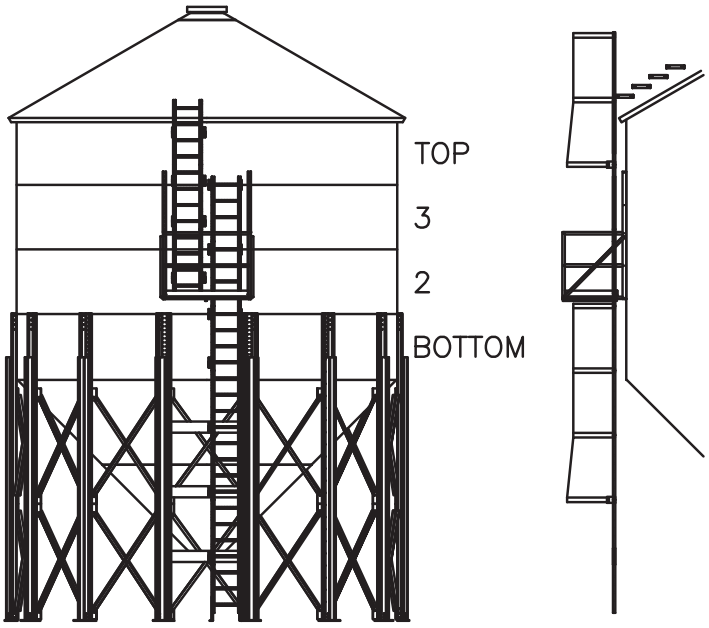

2104HBT

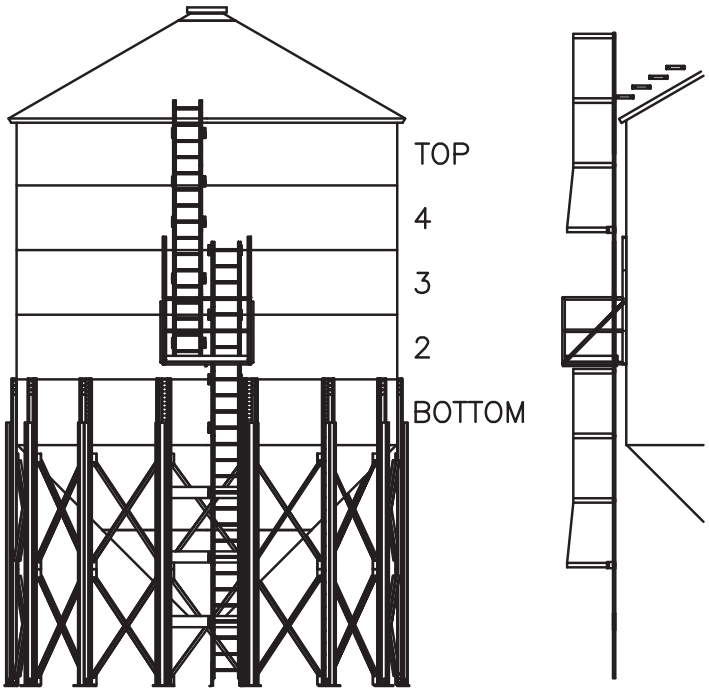

2105HBT

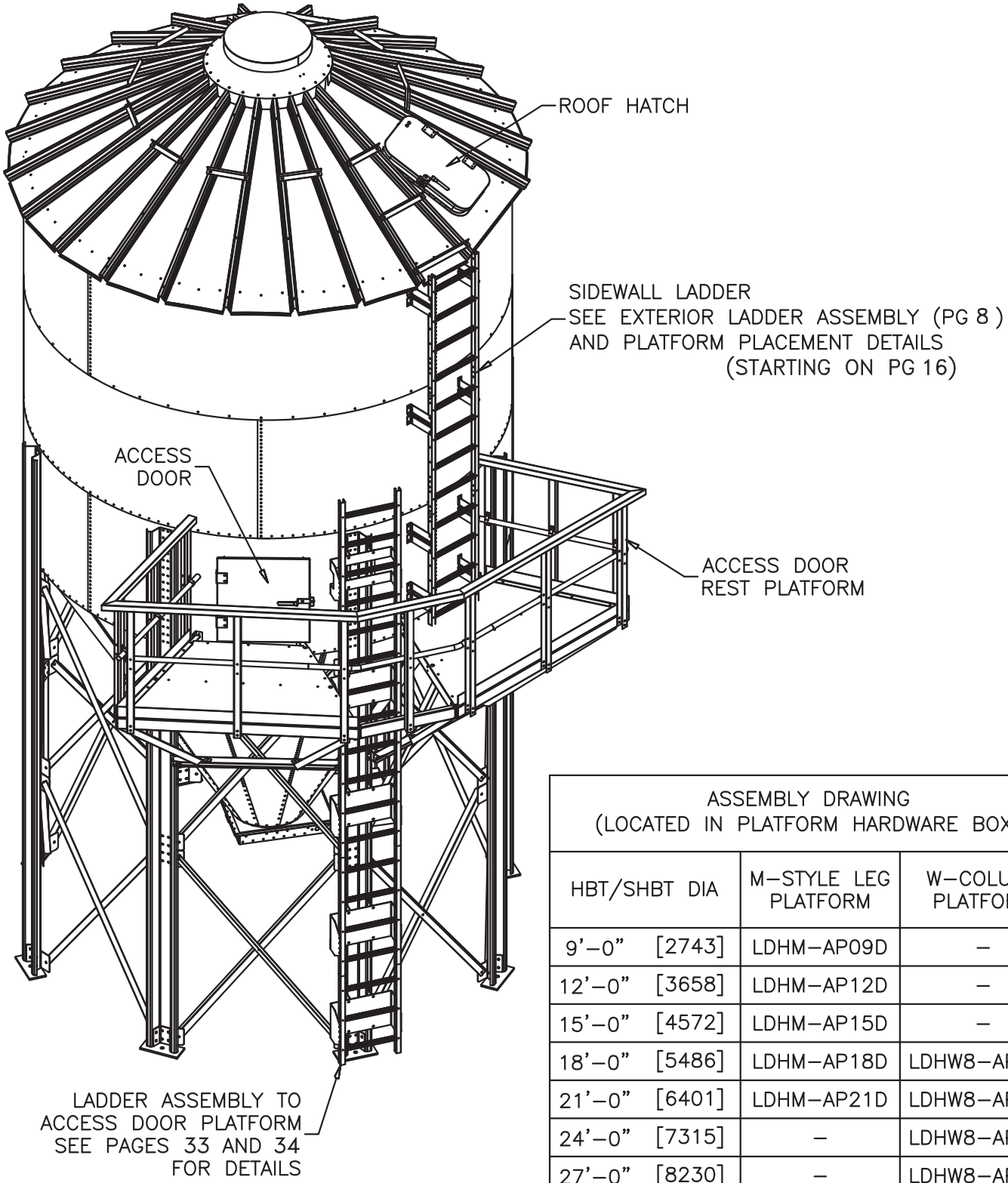

ASSEMBLY DRAWING (LOCATED IN PLATFORM HARDWARE BOX)		
HBT/SHBT DIA	M–STYLE LEG PLATFORM	W–COLUMN PLATFORM
9'–0" [2743]	LDHM–AP09D	–
12'–0" [3658]	LDHM–AP12D	–
15'–0" [4572]	LDHM–AP15D	–
18'–0" [5486]	LDHM–AP18D	LDHW8–AP18D
21'–0" [6401]	LDHM–AP21D	LDHW8–AP21D
24'–0" [7315]	–	LDHW8–AP24D
27'–0" [8230]	–	LDHW8–AP27D
30'–0" [9144]	–	LDHW8–AP30D
33'–0" [10058]	–	LDHW8–AP33D
36'–0" [10973]	–	LDHW8–AP36D

Ladder Assembly To Access Door Platform

for HBT/SHBT With M-Style Leg

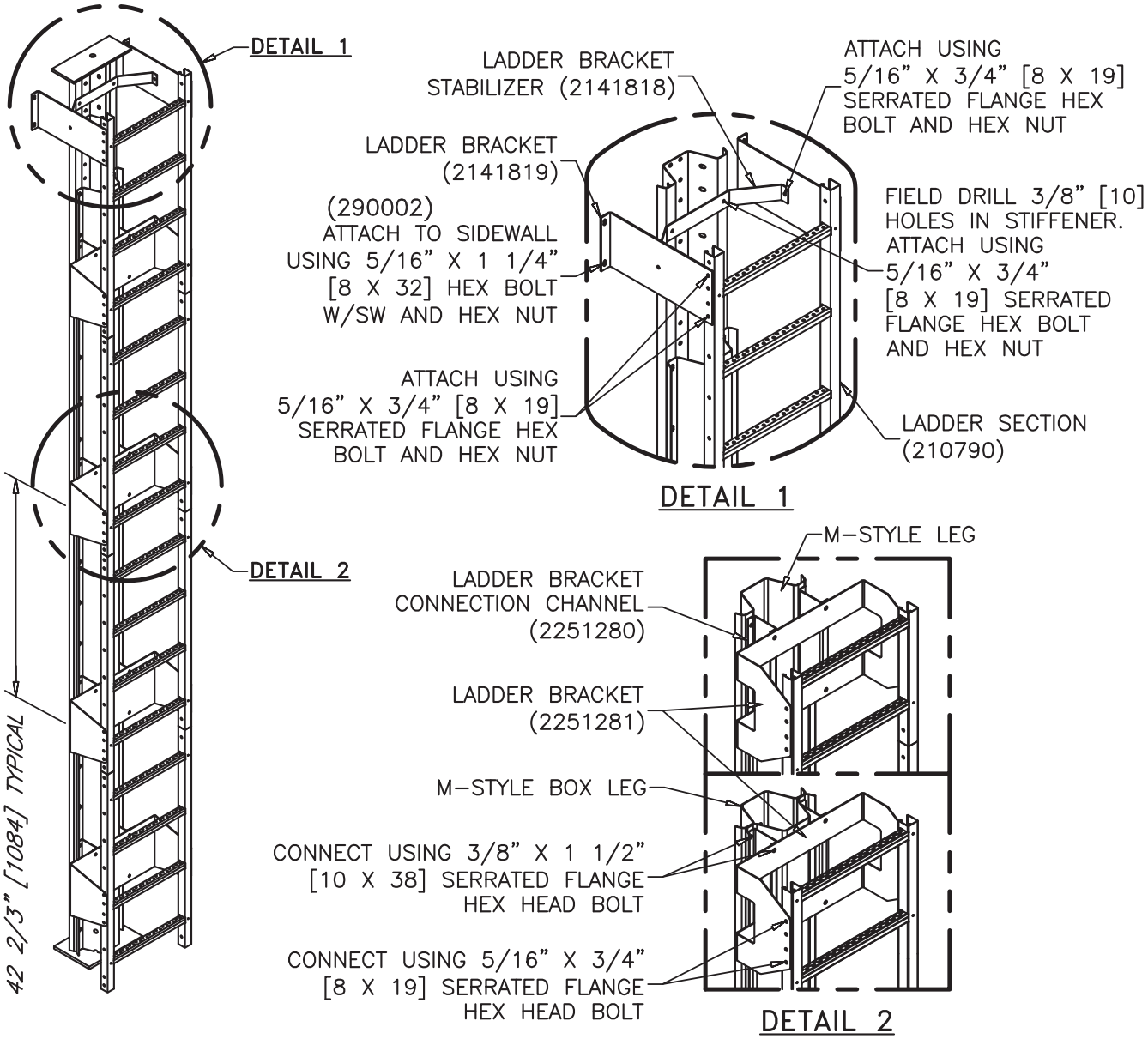

LEG LADDER PACKAGE	LEG HEIGHT	SAFETY CAGE	PLATFORM	MIN. LEG HEIGHT	MAX. LEG HEIGHT
LDHM07	7'–3" [2210]	–	–	4'–3" [1295]	7'–6" [2286]
LDHM11	10'–9" [3277]	–	–	7'–9" [2362]	11'–0" [3353]
LDHM14	14'–4" [4369]	–	–	11'–4" [3454]	14'–7" [4445]
LDHM18	17'–11" [5461]	–	–	14'–11" [4547]	18'–2" [5537]
LDHM21	21'–5" [6528]	YES	–	18'–5" [5613]	21'–8" [6604]
LDHM25	25'–0" [7620]	YES	–	22'–0" [6706]	25'–3" [7696]
LDHM28	28'–7" [8712]	YES	–	25'–7" [7798]	28'–10" [8788]

Ladder Assembly to Access Door Platform

For HBT/SHBT With Column

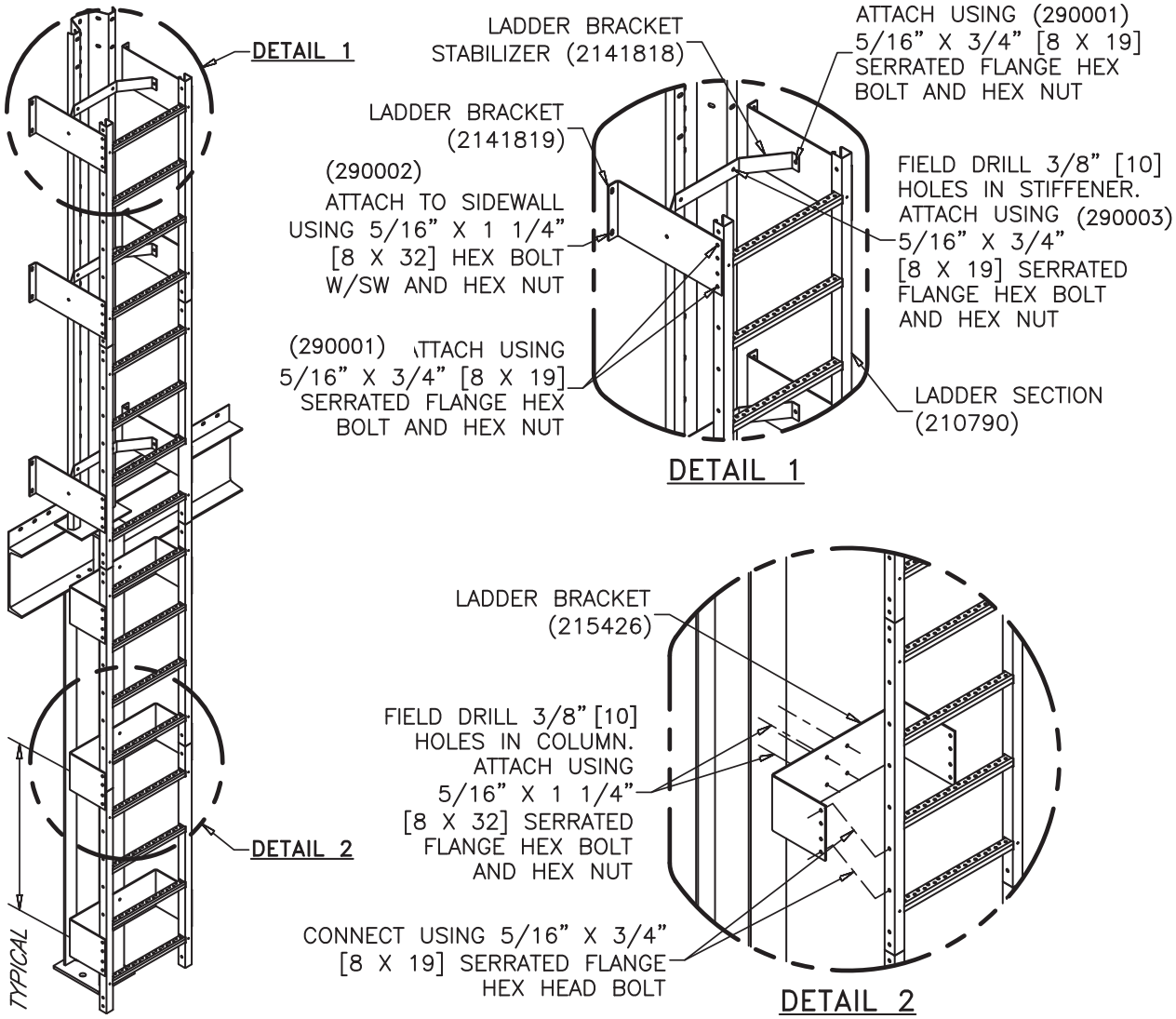

LEG LADDER PACKAGE	LEG HEIGHT	SAFETY CAGE	PLATFORM	MIN. LEG HEIGHT	MAX. LEG HEIGHT
LDHW07	7'–3" [2210]	–	–	4'–3" [1295]	7'–6" [2286]
LDHW11	10'–9" [3277]	–	–	7'–9" [2362]	11'–0" [3353]
LDHW14	14'–4" [4369]	–	–	11'–4" [3454]	14'–7" [4445]
LDHW18	17'–11" [5461]	–	–	14'–11" [4547]	18'–2" [5537]
LDHW21	21'–5" [6528]	YES	–	18'–5" [5613]	21'–8" [6604]
LDHW25	25'–0" [7620]	YES	–	22'–0" [6706]	25'–3" [7696]
LDHW28	28'–7" [8712]	YES	–	25'–7" [7798]	28'–10" [8788]

WHEN WIND RINGS ARE SUPPLIED FOR HOPPER BOTTOM TANKS AND FLAT BOTTOM BINS
REFER TO DETAIL FOR WIND RING CLIP LOCATION

TO ENSURE COMPLIANCE WITH OSHA REGULATIONS WIND RINGS MUST BE INSTALLED IN RELATION TO THE LADDER RUNGS AS SHOWN.

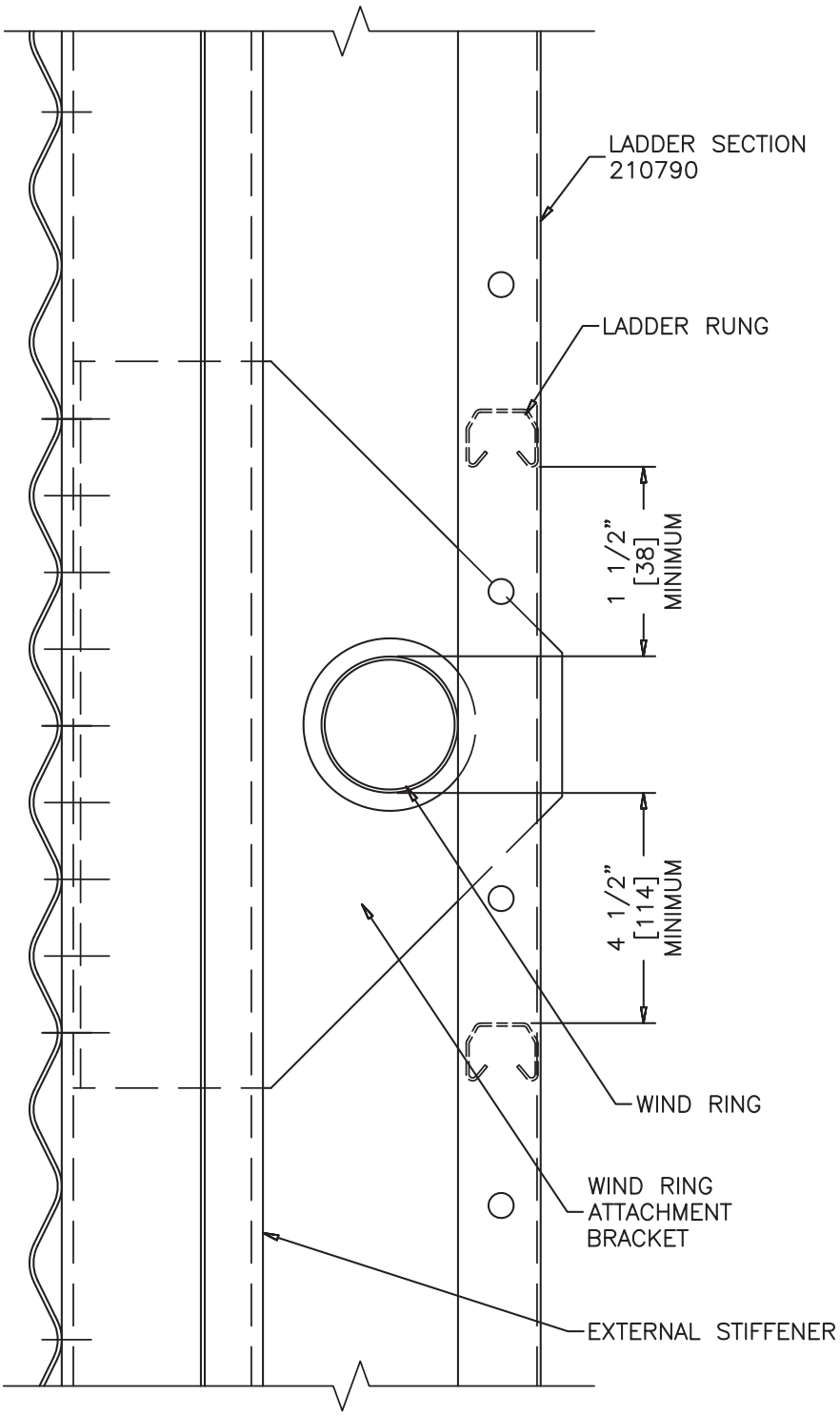

Rest Platform and Ladder Orientation

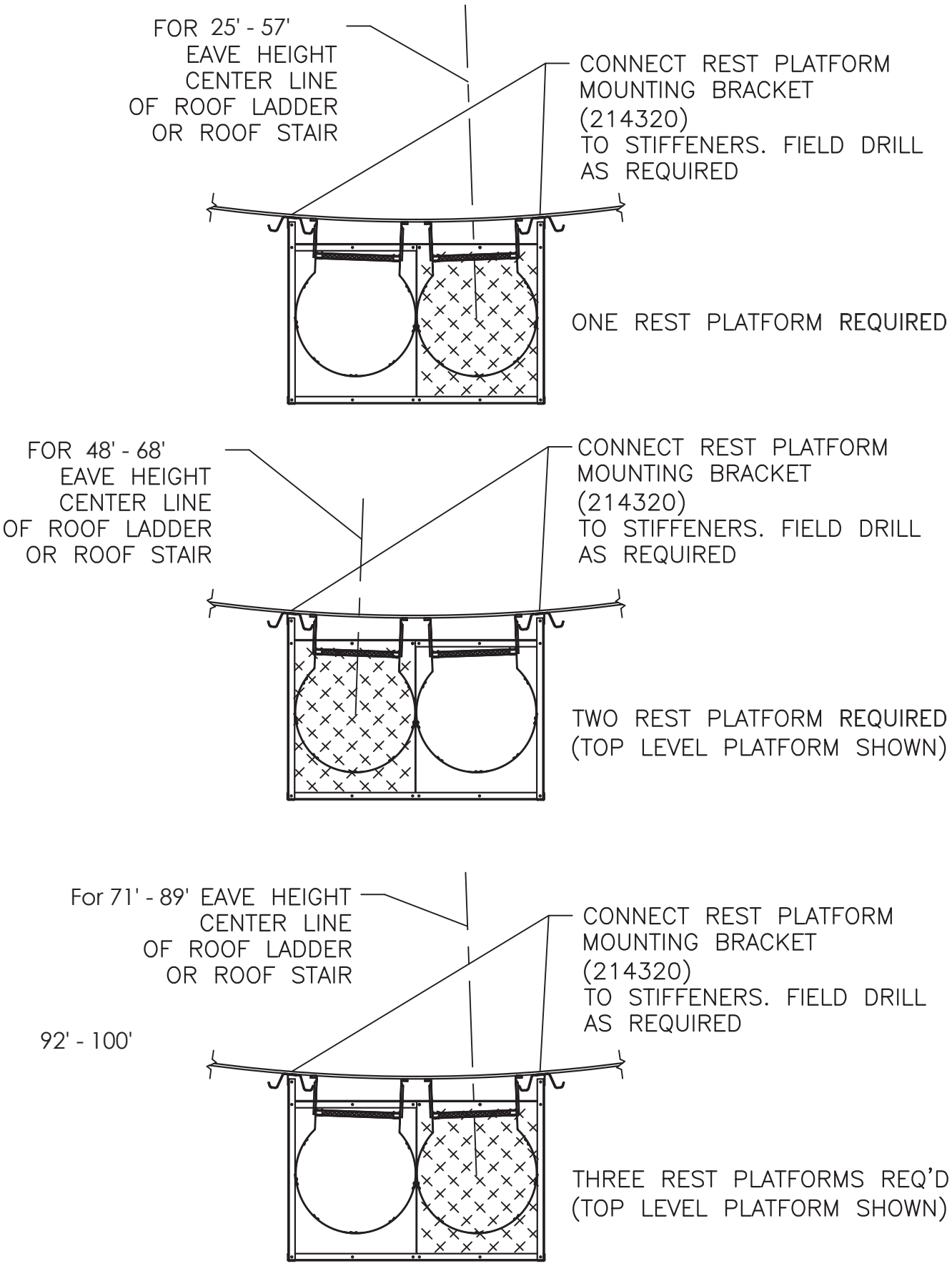

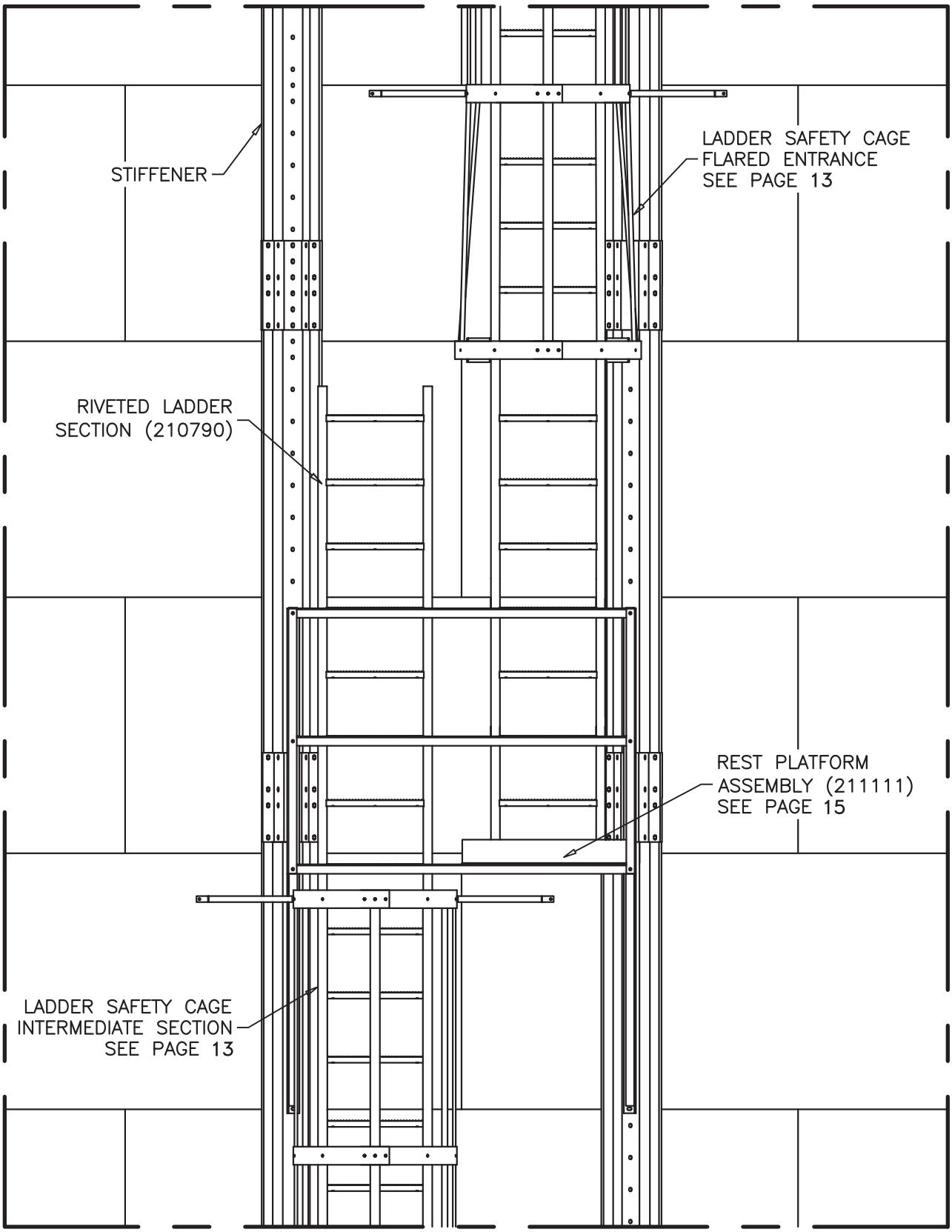
STIFFENER
LADDER SAFETY CAGE
FLARED ENTRANCE
SEE PAGE 13
RIVETED LADDER
SECTION (210790)
REST PLATFORM
ASSEMBLY (211111)
SEE PAGE 15
LADDER SAFETY CAGE
INTERMEDIATE SECTION
SEE PAGE 13

SCAFCO®
Grain Systems Co.

5400 E. Broadway Avenue
PO Box 11215
Spokane, WA 99211 USA

Phone: +1-509-535-1571
E-mail: info@SCAFCOgrain.com
www.SCAFCOgrain.com

GS3004E01219